INDHOLD

Diagrammer og PC plader 1
Transistor, IC og diode liste 2
Elektrisk stykliste 3
Mekanisk stykliste 4
Mekanisk justering 5
Elektriske justeringer båndoptager 6
Elektriske justeringer radio 7
Tekniske data 8
Adskillelse 9
Servicetips (wow frekvenser) 10

For Service Manuals Contact
MAURITRON TECHNICAL SERVICES
8 Cherry Tree Rd, Chinnor
Oxon OX9 4QY
Tel:- 01844-351694 Fax:- 01844-352554
Email:- enquiries@mauritron.co.uk

CONTENTS

Circuit diagrams and PC boards 1
Survey of transistors, IC's and diodes 2
Electrical parts list 3
Mechanical parts list 4
Mechanical adjustments 5
Electrical adjustments, tape recorder 6
Electrical adjustments, radio 7
Technical data 8
Dismantle 9
Service tips (wow frequencies) 10

INTRODUKTION

Beocenter 2600, type 2626 er elektrisk identisk med radio og båndoptagerdel i Beocenter 4600, type 2631.
Den elektriske stykliste over LF-delen indeholder kun venstre kanals komponenter. Der er taget hensyn til dette ved nummereringen på diagrammet. De to sidste cifre er identiske. Venstre kanal begynder med 100 og højre med 200.
Foruden et positionsnummer er hver komponent forsynet med en koordinatbetegnelse, f.eks. B3. Denne betegnelse angiver komponentens placering på PC-pladen, der er inddelt i kvadratiske felter.
I denne serviceanvisning er alle komponentplaceringstegninger vist fra printsiden.

INTRODUCTION

Beocenter 2600, type 2626 is electrically identical with the radio and tape recorder circuits in Beocenter 4600, type 2631.
The electrical parts list for the AF section deals with the components of the left channel, only. This has been taken into consideration at the numbering of the diagramme. The last two digits are identical. Left channel begins with 100, right channel with 200.
Besides a number each component is provided with a co-ordinate designation, e.g. B3. This designation refers to the position of the component on the PC board which is divided into squares.
In this service manual all drawings of the component placing are shown from the copperfoil side.

FM SIGNALNIVEAUER/
FM SIGNAL LEVELS/
UKW SIGNAL NIVEAUS

2TP40 8 mV
2TP41 600 mV
2TP42 40 mV

FØLSOMHEDER/
SENSITIVITIES/
EMPFINDLICHKEITEN

6TP100 180 mV
6TP200 180 mV
Tape 200 mV
Phono 2,5 mV

MÅLEBETINGELSER FOR DIAGRAM:

Alle DC spændinger er målt i forhold til stel med voltmeter (indre modstand 11 M Ohm).
DC spændinger *uden parentes er målt med modtageren i stilling FM og antennesignal på 500* µV (1 mV EMK) med pilottone, volume på 0.
DC spændinger i AM delen *uden* parentes er målt med MW knappen aktiveret og signal på 1 V tilført kunstantenne (1MHz).
DC spændinger *i* parentes er målt uden signal eller med muting aktiveret.
FM signalniveauer er målt ved Δ f 40 kHz, f mod. 1 kHz og antennesignal på 500 µV, (1 mV EMK).
LF følsomheder er målt ved 25 W output. Balance, bas, diskant på 0, volume på max. Udgang belastet med 4 Ohm, input 1 kHz.
Mekaniske omskiftere er vist i neutral stilling.
Signalvej vist henholdsis AM (stilling LW), FM og for LF venstre kanal.

Symbol for sikkerhedsmodstande

Ved udskiftning af komponenter med dette symbol skal der anvendes samme type, samt samme værdier for ohm og watt. Den nye komponent skal monteres på samme måde som den udskiftede.

CONDITIONS OF MEASUREMENT FOR DIAGRAM

All DC voltages are measured in proportion to chassis with voltmeter(inner resistance 11 M Ohm).
DC voltages *witout* brackets are measured with the receiver in position FM and an aerial signal of 500 µV (1 mV EMK) with pilot signal, volume on 0.
DC voltages in the AM section *without* brackets are measurd with the MW button activated and a signal of 1 V, supplied to the dummy load. (1 MHz).
DC voltages *with* brackets are measured without signal or with muting activated.
FM signal levels are measured at Δ f 40 kHz, f mod. 1 kHz and aerial signal 500 µV. (1 mV EMK).
AF sensitivities are measured at 25 W output. Balance, bass, treble on 0, volume on max. Output loaded with 4 Ohm, input 1kHz.
Mechanical switches are shown in neutral position.

Symbol for safety resistors

In case of replacement of components with this symbol use the same type and the same values for Ohm and Watt. The new component is to be mounted in the same way as the replaced.

MESSBEDINGUNGEN FÜR SCHALTBILD

Alle DC Spannungen sind im Verhältnis zu Chassis mit Voltmeter (inner Widerstand 11 M Ohm) gemessen.
DC Spannungen *ohne* Klammern sind mit dem Empfänger in Stellung FM und dem Antennensignal von 500 µV (1 mV EMK) mit Pilotton gemessen, Volume auf 0.
DC Spannungen im AM Teil *ohne* Klammern sind mit aktivisiertem MW Knopf und einem Signal von 1 V an die Kunstantenne zugeleitet gemessen. (1 MHz).
DC Spannungen *in* Klammern sind ohne Signal oder mit aktivisierter Stummabstimmung gemessen.
UKW Signalniveaus sind bei Δ f 40 kHz, f mod. 1 kHz und Antennensignal 500 µV gemessen. (1 mV EMK).
NF Empfindlichkeiten sind an 25 W Ausgang gemessen. Balance, Tiefton, Diskant auf 0, Volume auf max. Ausgang mit 4 Ohm, Eingang 1 kHz belastet.
Mechanische Umschalter sind in neutraler Stellung gezeigt.
Signalweg für bzw. AM (Stellung LW), FM und NF linken Kanal gezeigt.

Symbol für Sicherheitswiderstände

Bei Auswechselung von Sicherheitswiderständen mit diesem Symbol den gleichen Typ und die gleichen Werte für Ohm und Watt benutzen. Der neue Komponent muß wie der ausgewechselte montiert werden.

ABO CENTER VIDEIRIKSENS ELEKTRONIK

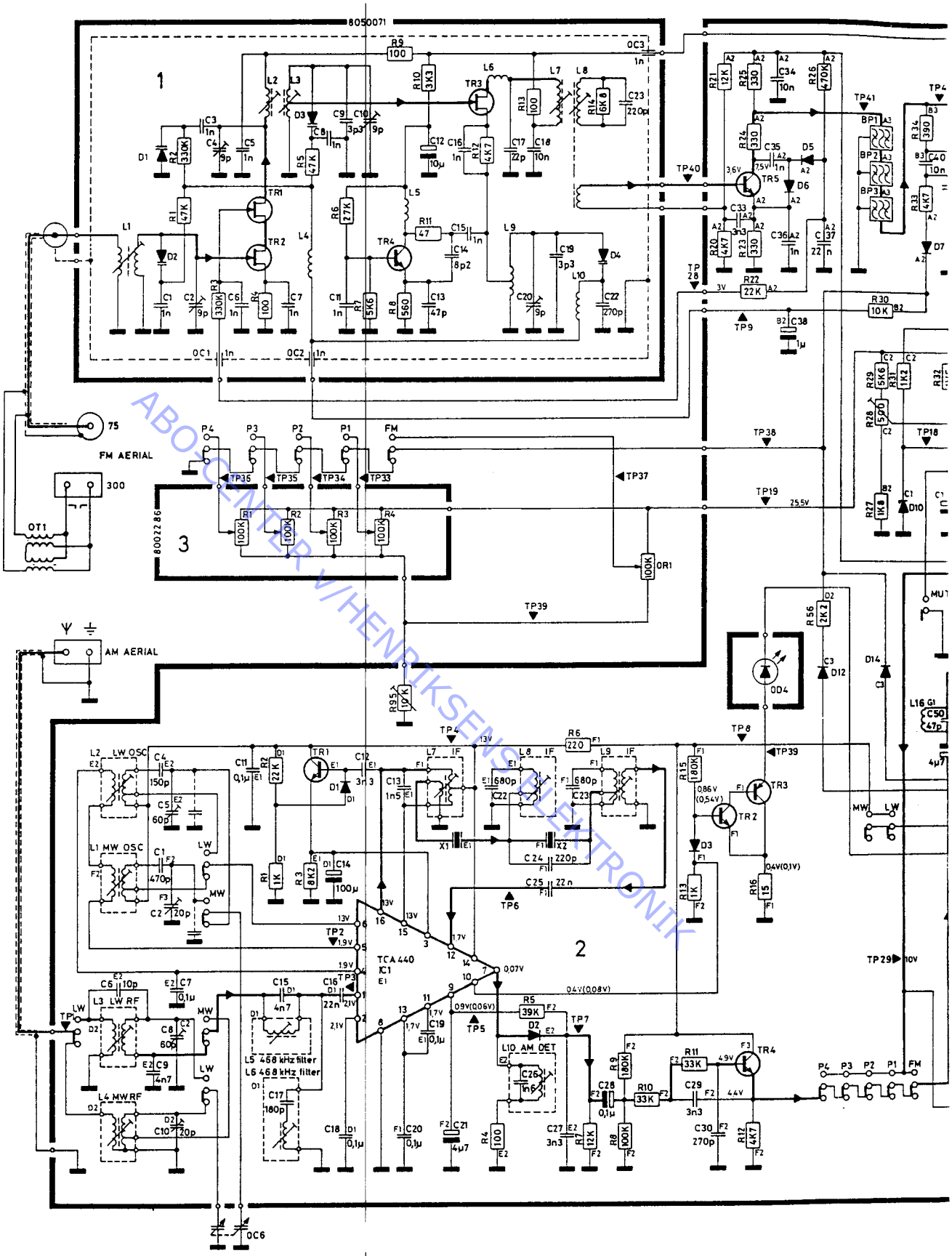

ABO-CENTER V/HENRIKSENS ELEKTRONIK

For Service Manuals Contact
MAURITRON TECHNICAL SERVICES
8 Cherry Tree Rd, Chinnor
Oxon OX9 4QY
Tel:- 01844-351694 Fax:- 01844-352554
Email:- enquiries@mauritron.co.uk

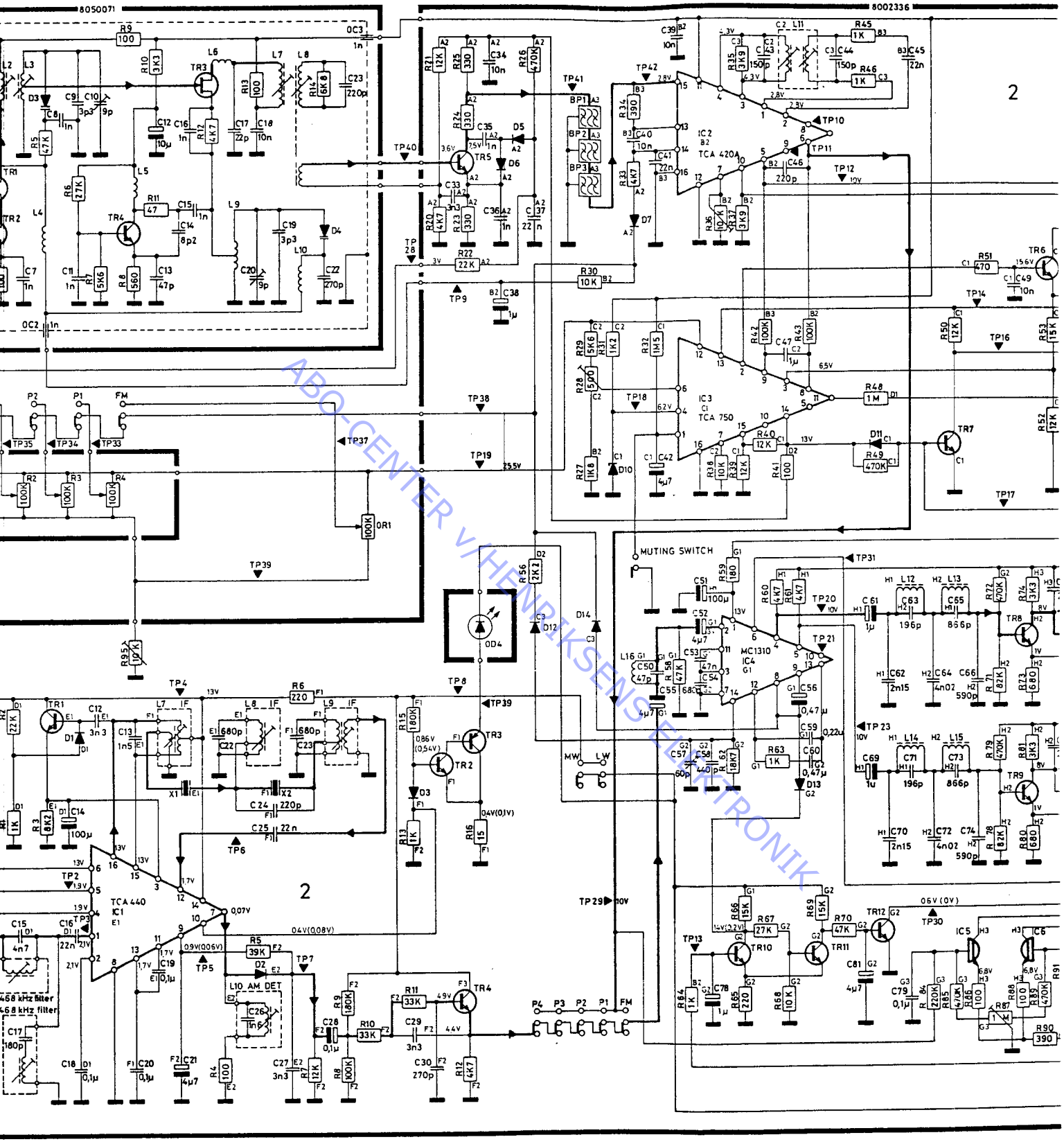

ABO-CENTER V/HENRIKSENS ELEKTRONIK

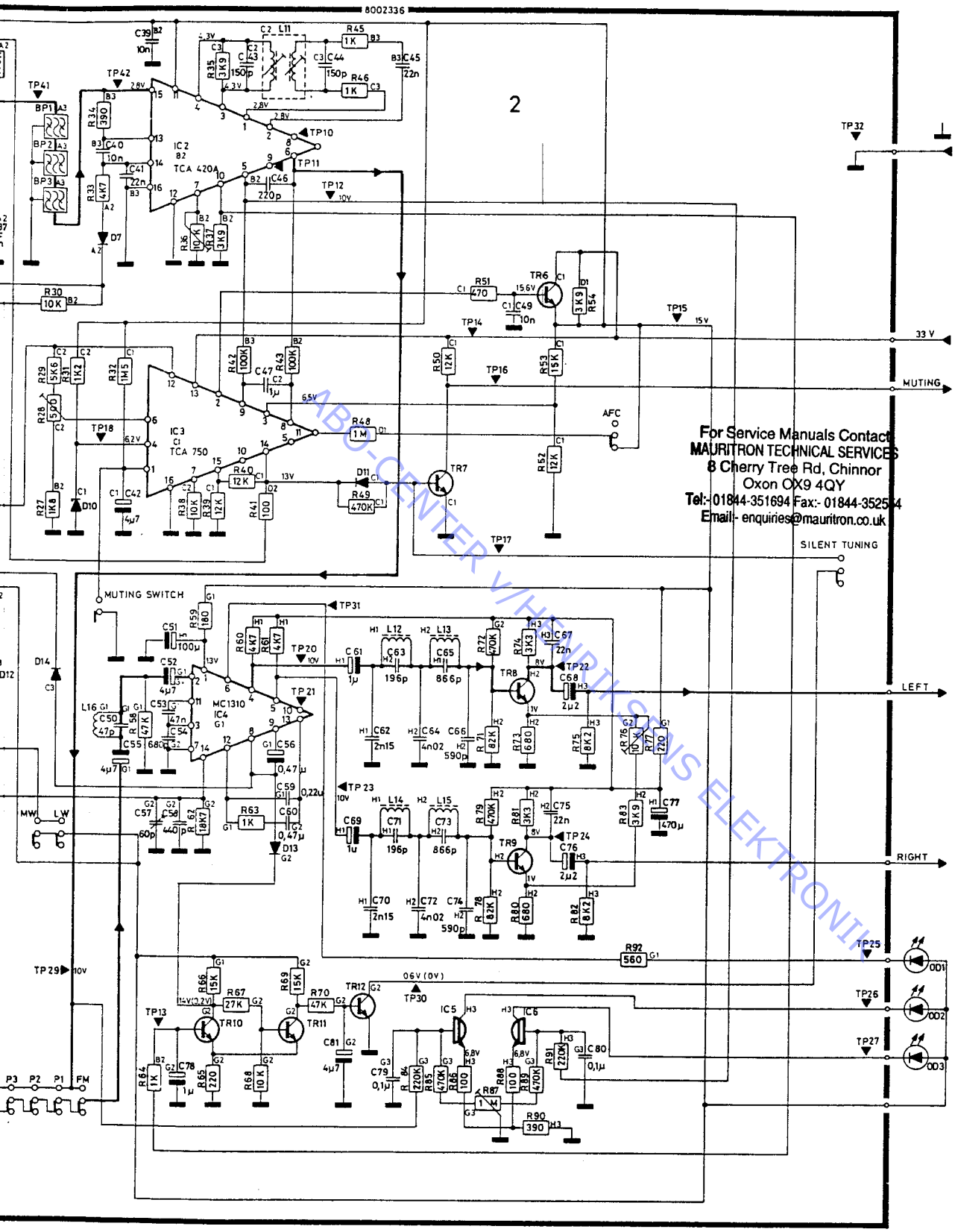

ABO-CENTER V/HENRIKSENS ELEKTRONIK

DIAGRAM 1

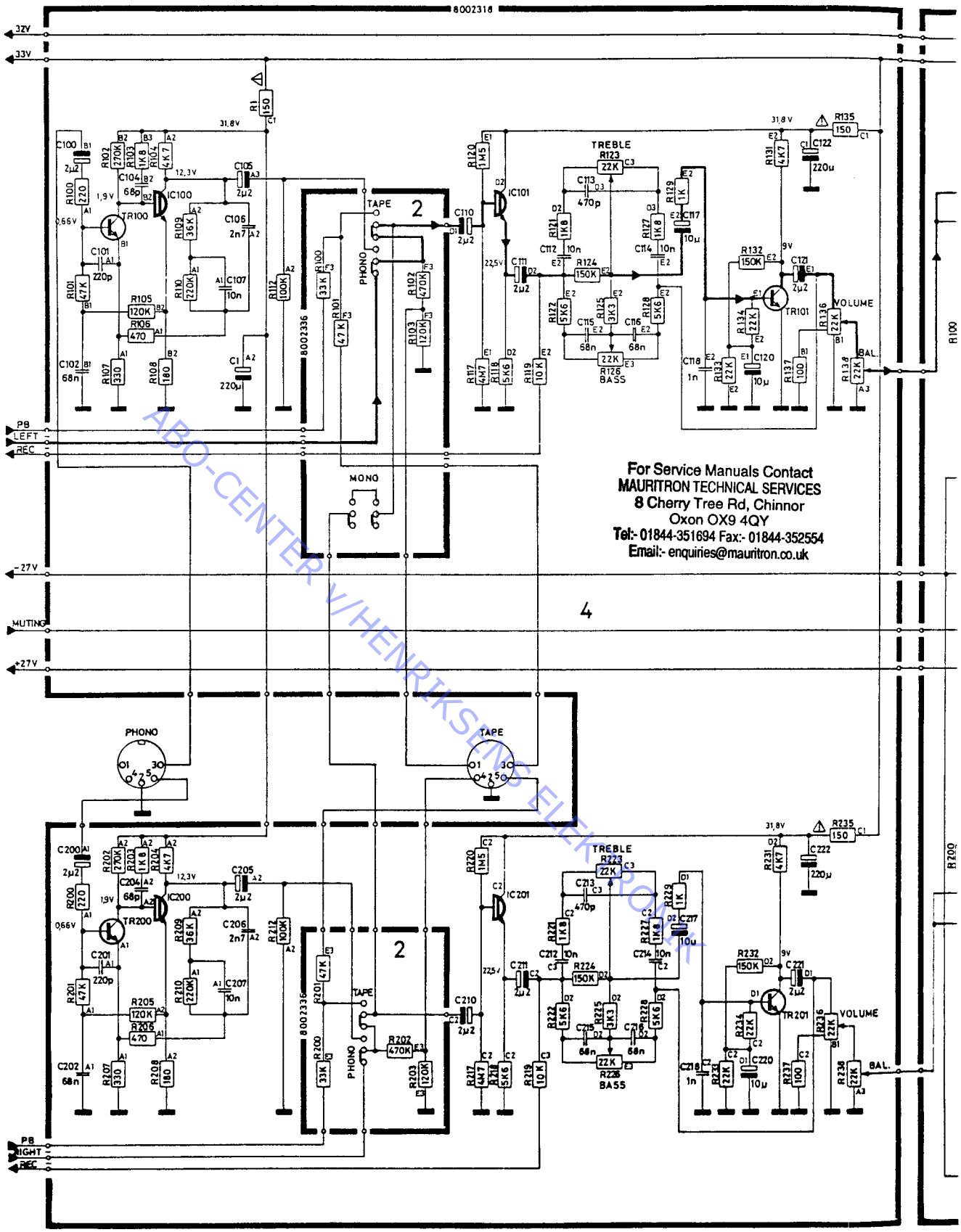

ABO-CENTER V/HENRIKSEN ELEKTRONIK

DIAGRAM 2

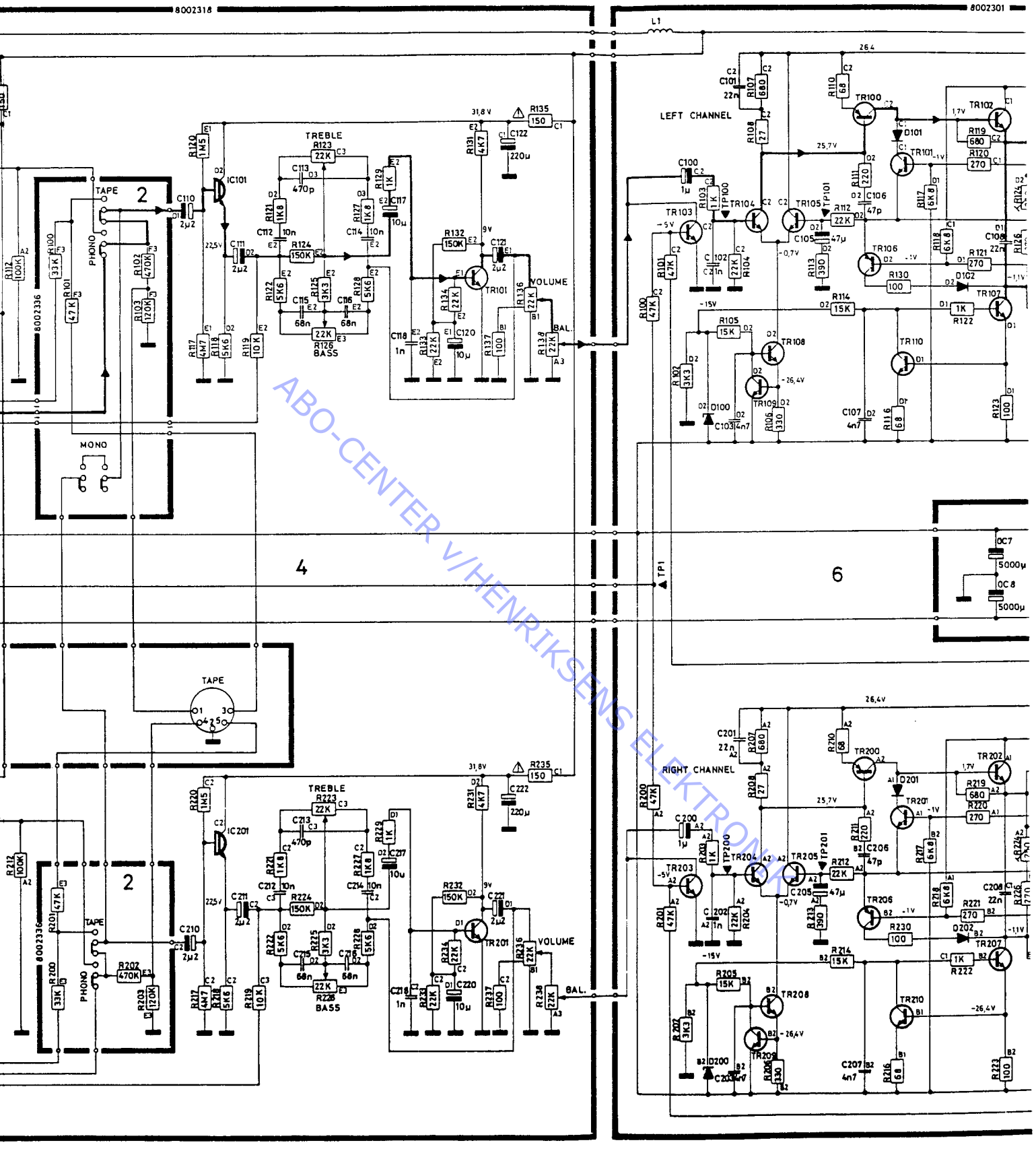

ABO-CENTER V/HENRIKSENS ELEKTRONIK

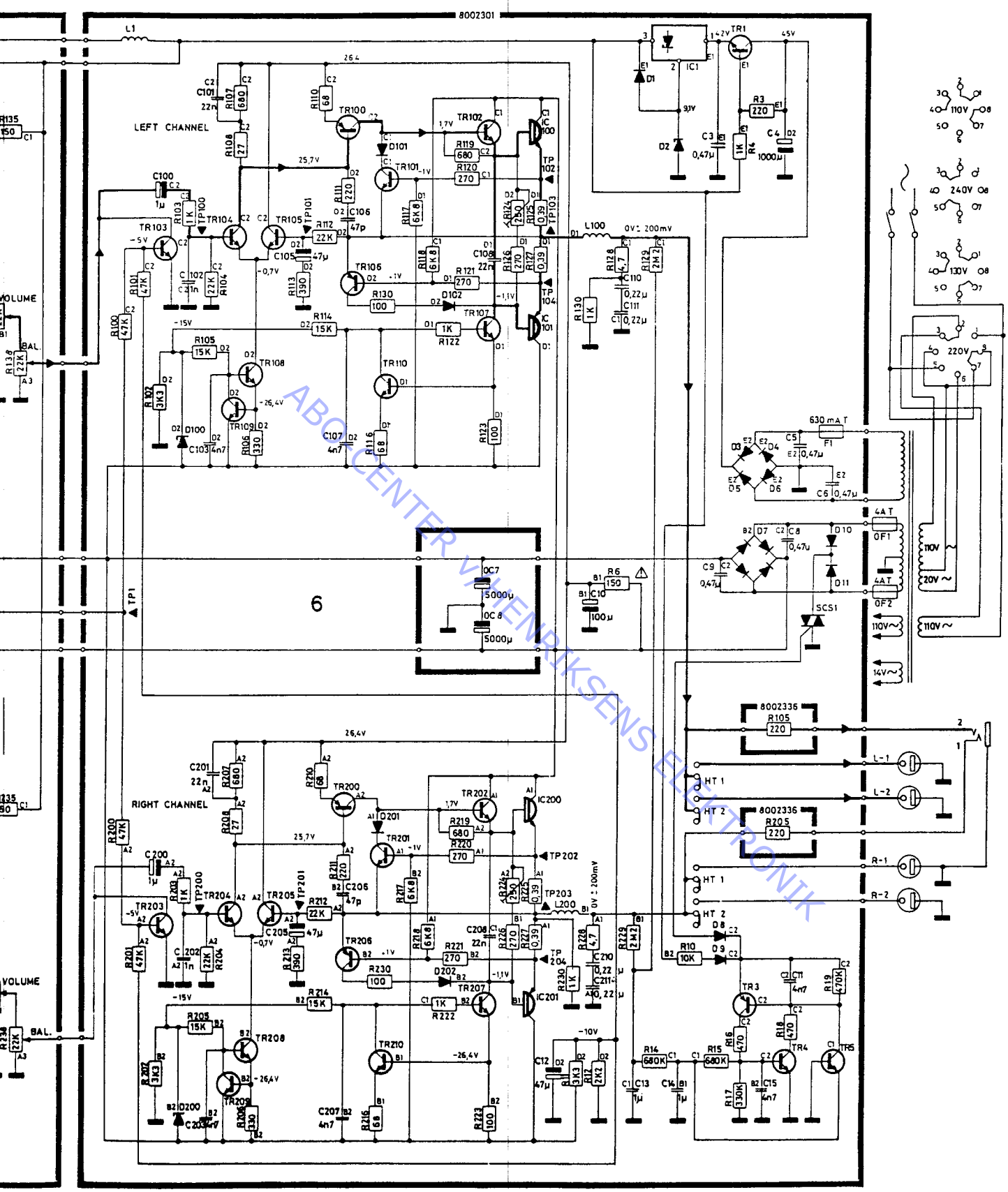

ABC CENTER VAN HENDRIKSENS ELEKTRONIK

For Service Manuals Contact
MAURITRON TECHNICAL SERVICES
8 Cherry Tree Rd, Chinnor
Oxon OX9 4QY
Tel:- 01844-351694 Fax:- 01844-352554
Email:- enquiries@mauritron.co.uk

For Service Manuals Contact
MAURITRON TECHNICAL SERVICES
8 Cherry Tree Rd, Chinnor
Oxon OX9 4QY
Tel:- 01844-351694 Fax:- 01844-352554
Email: enquiries@mauritron.co.uk

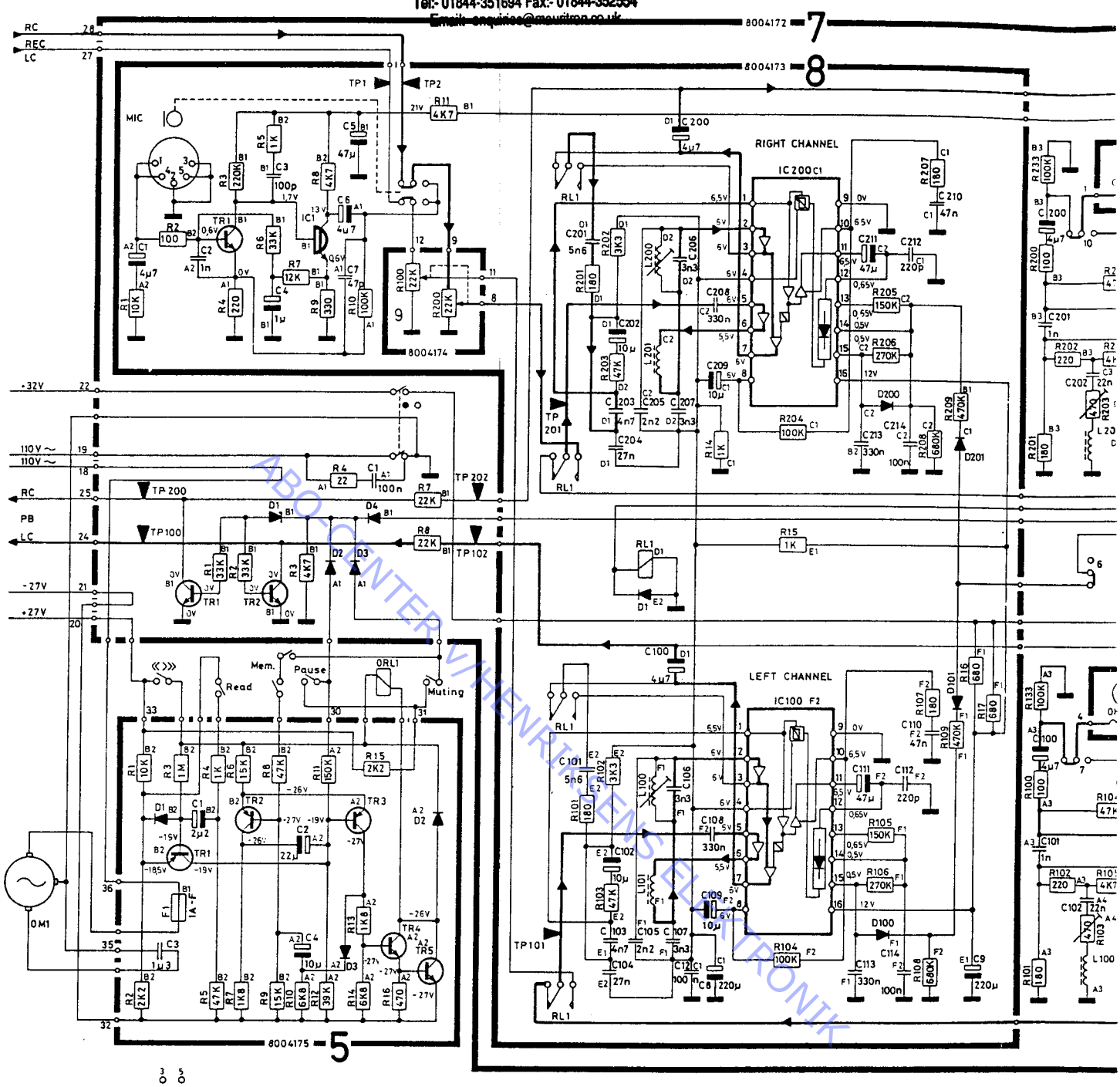

ABO-CENTER V/HENRIKSENS ELEKTRONIK

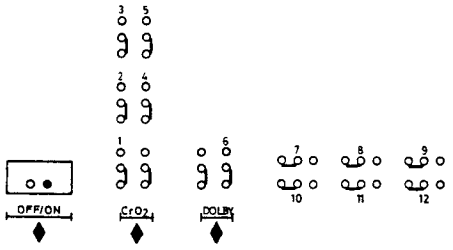

Signalvejen i optage position er vist i højre kanal, og gengive position er vist i venstre kanal.

The signal path in recording pos. is shown in right channel, and replay position is shown in left channel.

Der Signalweg in Aufnahmeposition is in rechten Kanal gezeigt, und die Wiedergabeposition ist in linkem Kanal gezeigt.

DIAGRAM 3

MÅLEPUNKTER DC	Spændingerne på 8IC100 og 8IC200 er målt med Dolby-knapper indtrykket. Spændingerne på 7TR102 - 7TR103, 7TR3 - 7TR4 og 7TR202 - 7TR203 er målt i stilling Record.	**TEST POINTS DC**
AC	Gengive fra pegelbånd: TP100 - TP200 ..... 700 mV TP101 - TP201 ..... 40 mV TP102 - TP202 ..... 700 mv	**AC**
CrO_2-knappen indtrykket og optageknappen i max.	Optage: TP3 ..... 65 V 98 kHz TP1 - TP2 ..... 40 mV TP101 - TP201 ..... 40 mV TP102 - TP202 ..... 580 mV TP103 - TP203 ..... 3 V 1 rød LED må lyse ved mono signal.	**CrO_2-button depr and recording but in max.**
Mikrofon	Optage: Mikrofon indgang ..... 90 µV	**Microphone**

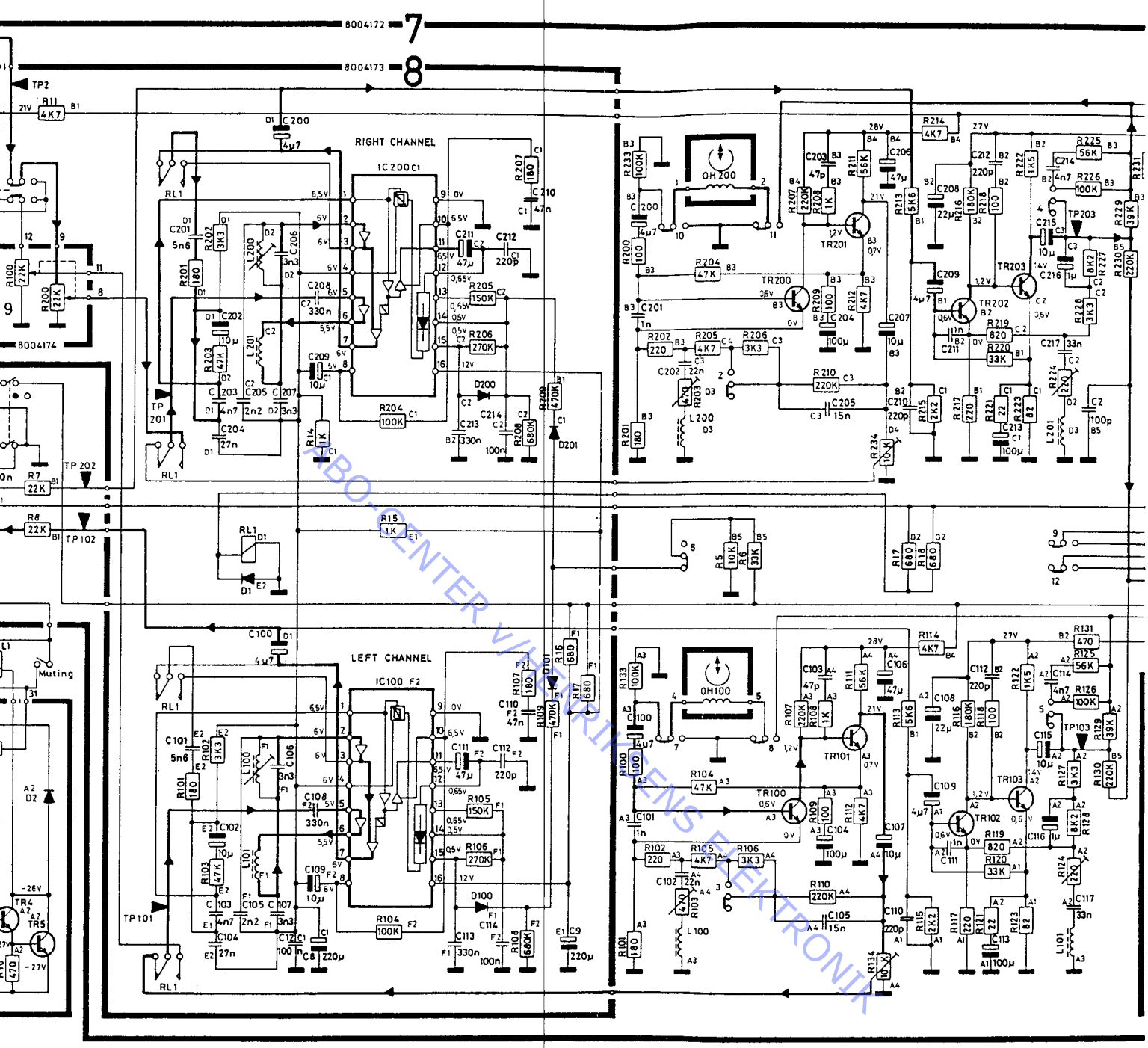

RADIO-CENTER VÆRKSTEDS ELEKTRONIK

MÅLEPUNKTER DC

Spændingerne på 8IC100 og 8IC200 er målt med Dolby-knapper indtrykket.
Spændingerne på 7TR102 - 7TR103, 7TR3 - 7TR4 og 7TR202 - 7TR203 er målt i stilling Record.

AC

Gengive fra pegelbånd:

TP100 - TP200	700 mV
TP101 - TP201	40 mV
TP102 - TP202	700 mv

CrO_2-knappen indtrykket og optageknappen i max.

Optage:

TP3	65 V 98 kHz
TP1 - TP2	40 mV
TP101 - TP201	40 mV
TP102 - TP202	580 mV
TP103 - TP203	3 V

1 rød LED må lyse ved mono signal.

Mikrofon

Optage:

Mikrofon indgang	90 µV

TEST POINTS DC

The voltages on 8IC100 and 8IC200 have been measured with depressed Dolbybutton.
The voltages on 7TR102 - 7TR103, 7TR3 - 7TR4 and 7TR202 - 7TR203 have been measured in position Record.

AC

Playing back from level tape:

TP100 - TP200	700 mV
TP101 - TP201	40 mV
TP102 - TP202	700 mV

CrO_2-button depressed and recording button in max.

Recording

TP3	65 V 98 kHz
TP1 - TP2	40 mV
TP101 - TP201	40 mV
TP102 - TP202	580 mV
TP103 - TP203	3 V

1 red LED must shine at mono signal.

Microphone

Recording:

Microphone input	90 µV

For Service Manuals Contact
MAURITRON TECHNICAL SERVICES
8 Cherry Tree Rd, Chinnor
Oxon OX9 4QY
Tel:- 01844-351694 Fax:- 01844-352554
Email:- enquiries@mauritron.co.uk

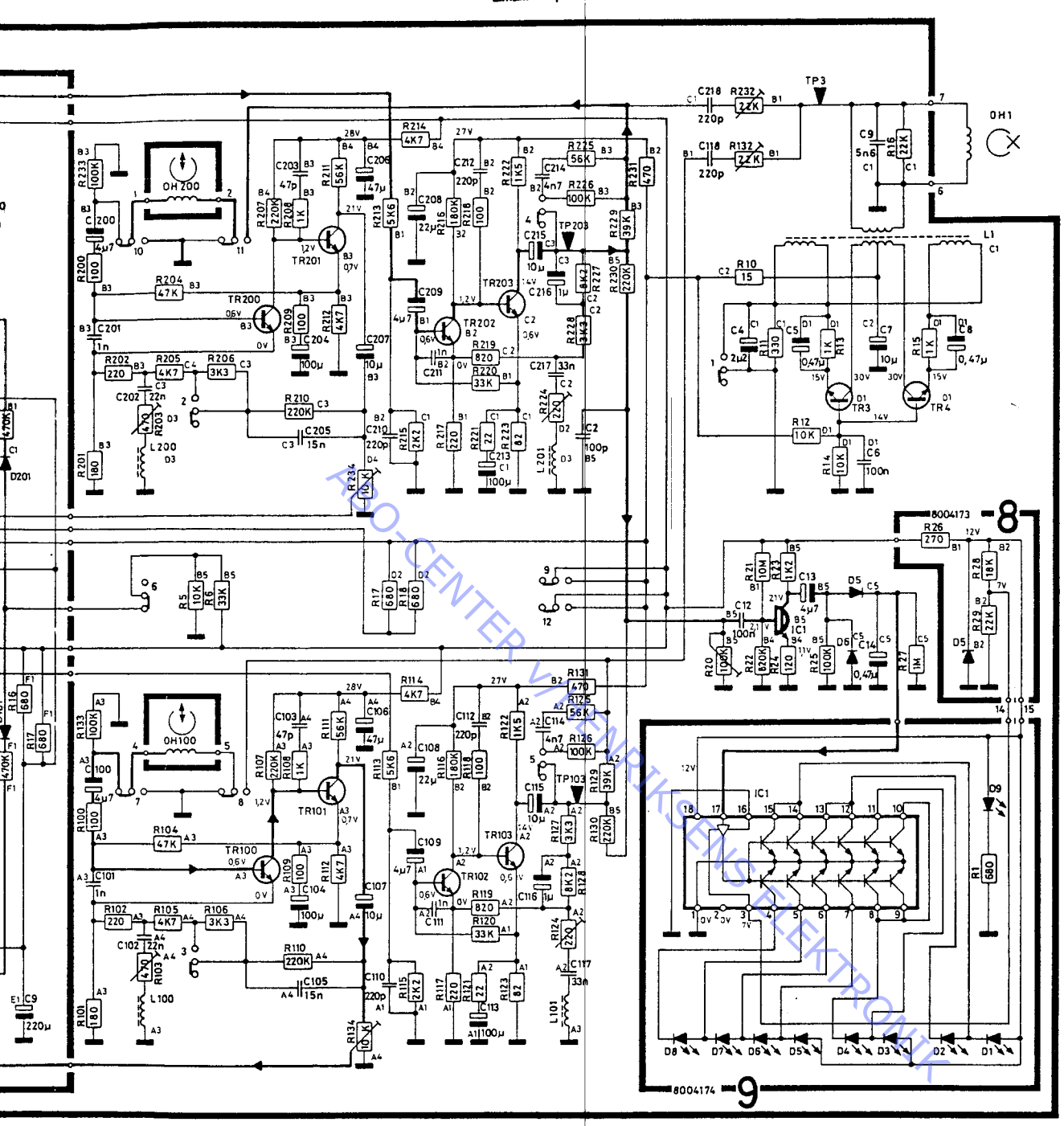

PRO-CENTER VITENRIKSENS ELEKTRONIK

TEST POINTS DC	The voltages on 8IC100 and 8IC200 have been measured with depressed Dolbybutton. The voltages on 7TR102 - 7TR103, 7TR3 - 7TR4 and 7TR202 - 7TR203 have been measured in position Record.	**TESTPUNKTE DC**	Die Spannungen auf 8IC100 and 8IC200 sind mit dem Dolby-Knopf eingedrückt gemessen. Die Spannungen auf 7TR102 - 7TR103, 7TR3 - 7TR4 und 7TR202 - 7TR203 sind in Position Record gemessen.
AC	Playing back from level tape: TP100 - TP200 ..... 700 mV TP101 - TP201 ..... 40 mV TP102 - TP202 ..... 700 mV	**AC**	Von Pegelband wiedergeben: TP100 - TP200 ..... 700 mV TP101 - TP201 ..... 40 mV TP102 - TP202 ..... 700 mV
CrO_2-button depressed and recording button in max.	Recording TP3 ..... 65 V 98 kHz TP1 - TP2 ..... 40 mV TP101 - TP201 ..... 40 mV TP102 - TP202 ..... 580 mV TP103 - TP203 ..... 3 V 1 red LED must shine at mono signal.	**CrO_2 Knopf eingedrückt und Aufnahme Knopf in max.**	Aufnehmen: TP3 ..... 65 V 98 kHz TP1 - TP2 ..... 40 mV TP101 - TP201 ..... 40 mV TP102 - TP202 ..... 580 mV TP103 - TP203 ..... 3 V Bei Mono-Signal muß ein rotes LED leuchten.
Microphone	Recording: Microphone input ..... 90 µV	**Mikrophon**	Aufnehmen: Mikrophoneingang ..... 90 µV

Tone control and pre-amplifier, 8002318, PC4

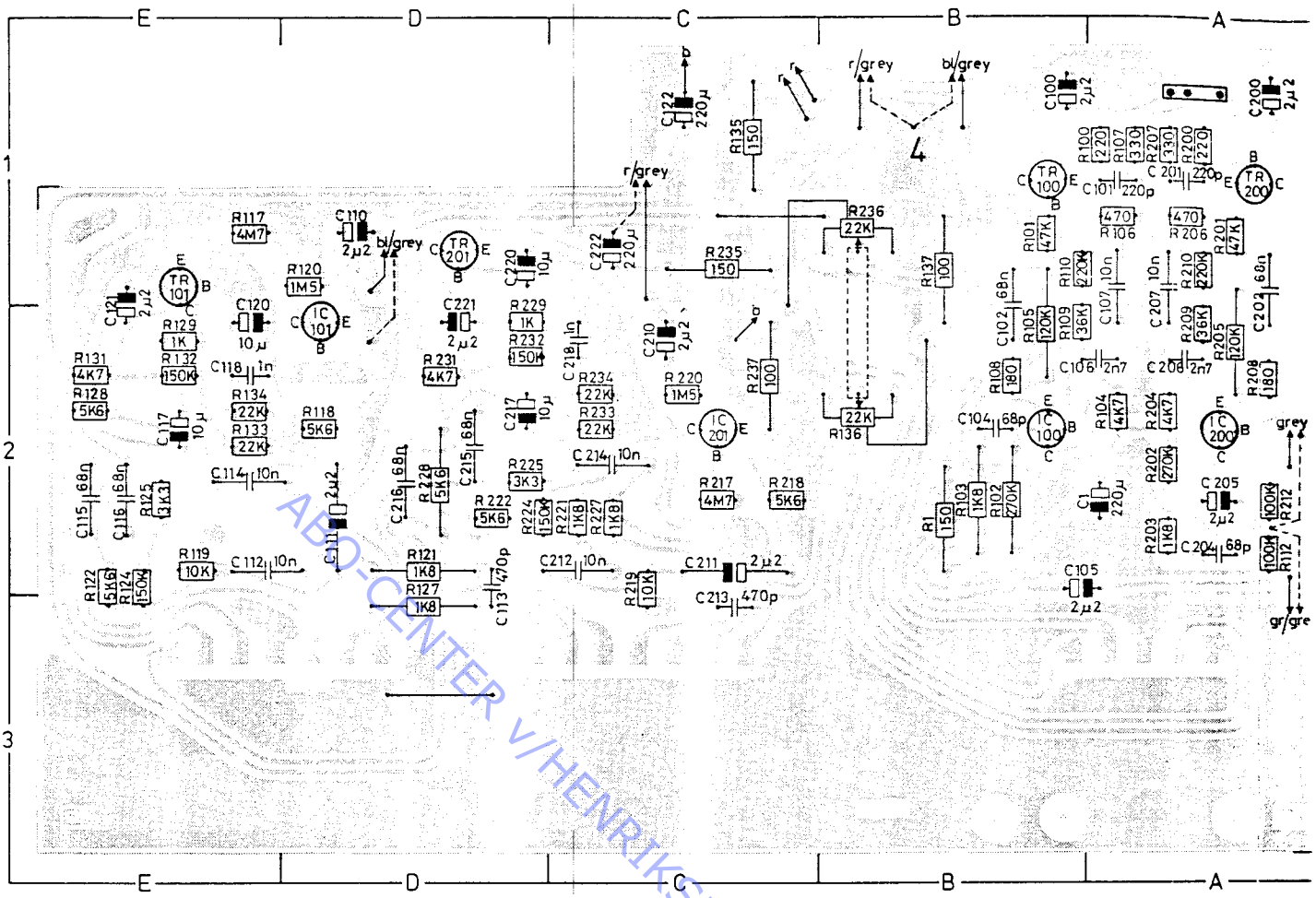

For Service Manuals Contact
MAURITRON TECHNICAL SERVICES
8 Cherry Tree Rd, Chinnor
Oxon OX9 4QY
Tel:- 01844-351694 Fax:- 01844-352554
Email:- enquiries@mauritron.co.uk

ABQ-CENTER V/HENRIKSENS ELEKTRONIK

Mic. and Dolby, 8004173, PC8

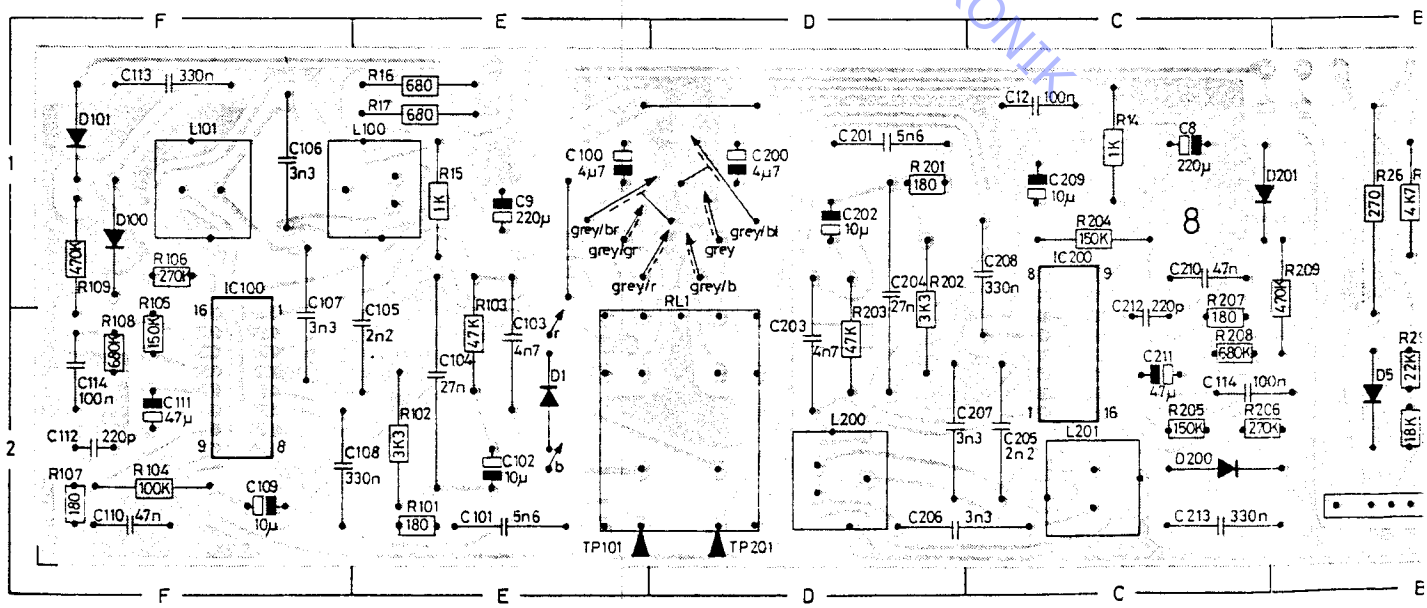

002318, PC4

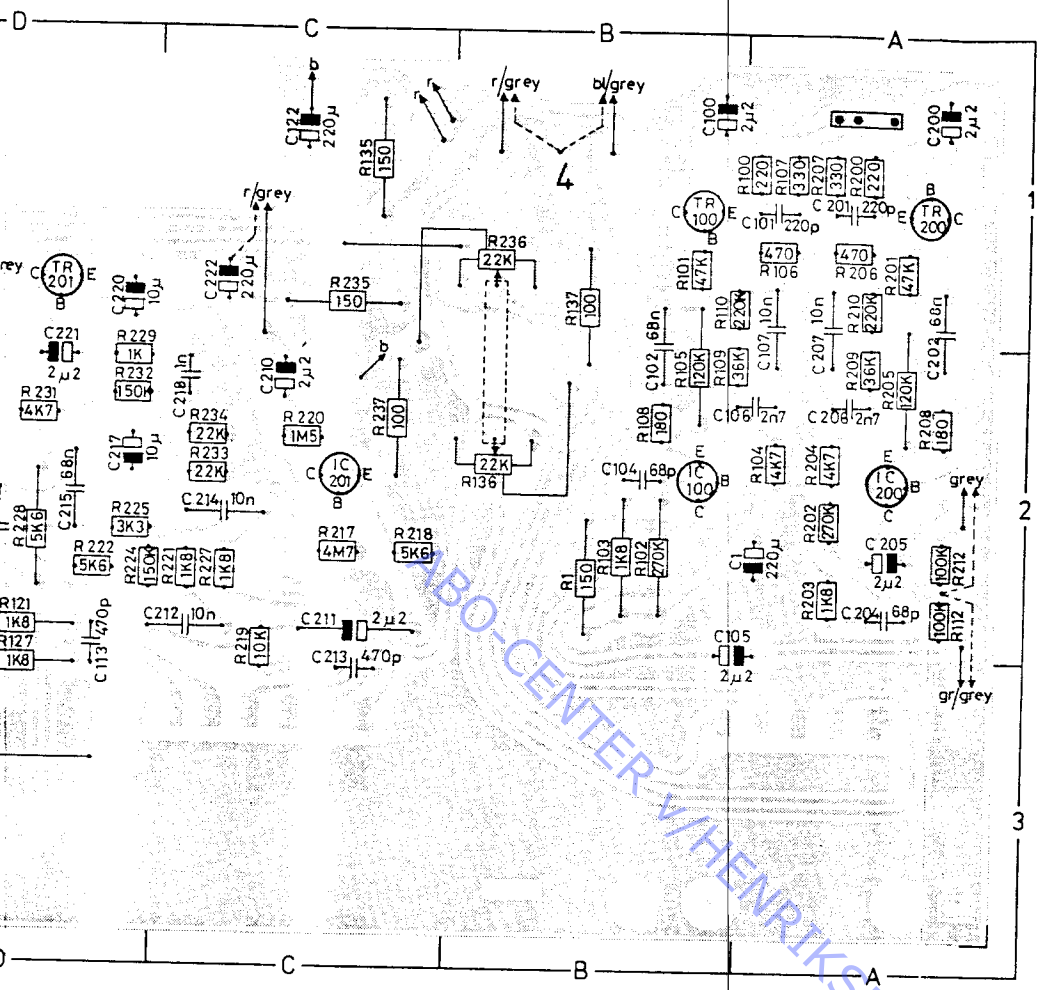

ABO-CENTER V/HENRIKSENS ELEKTRONIK

Indicator, 80

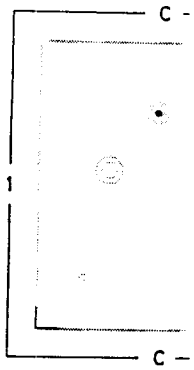

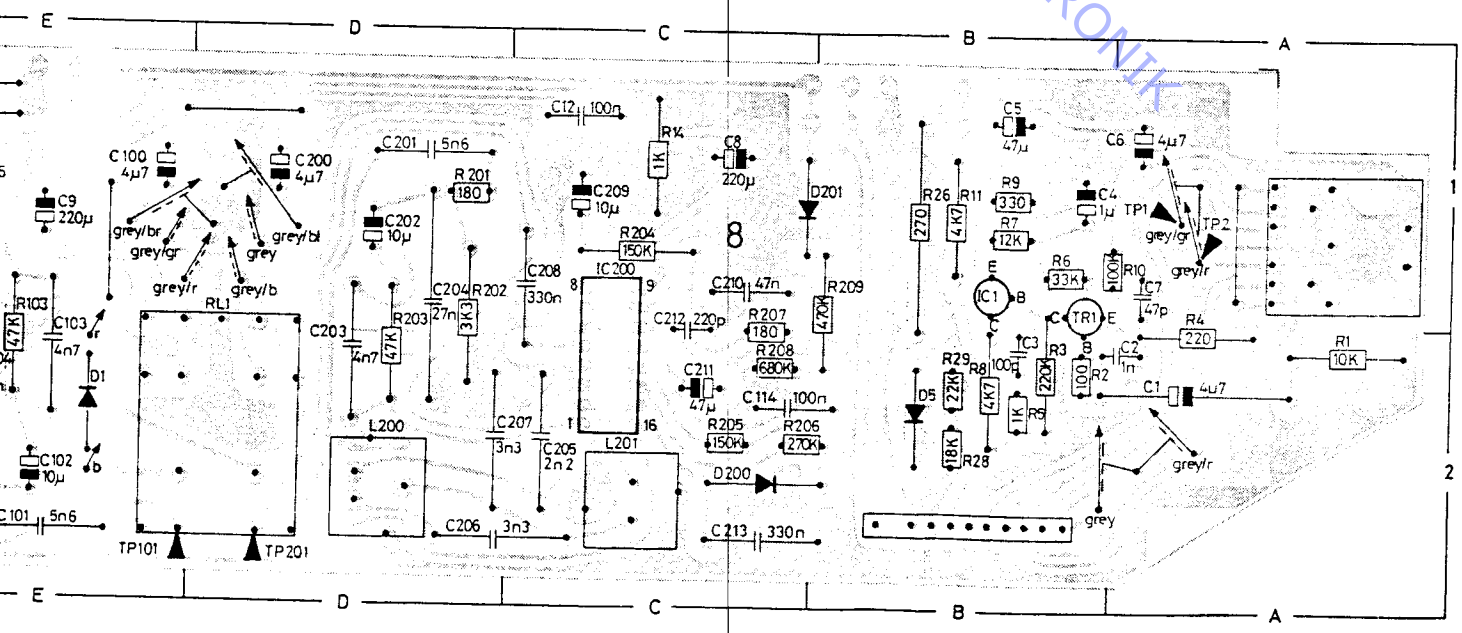

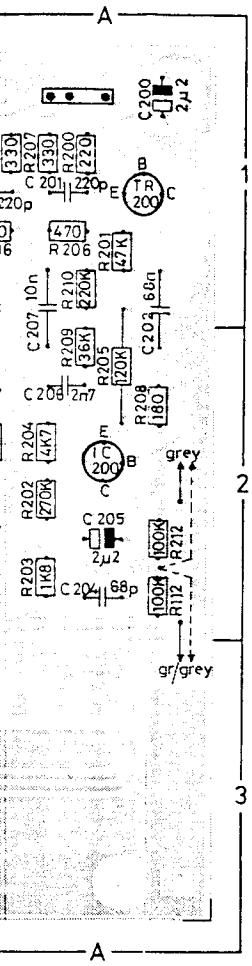

Auto-stop, 8004175, PC5

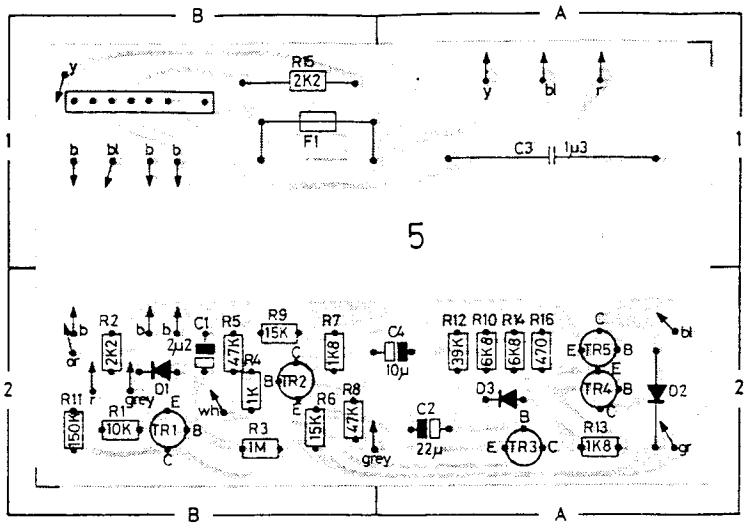

Indicator, 8004174, PC9

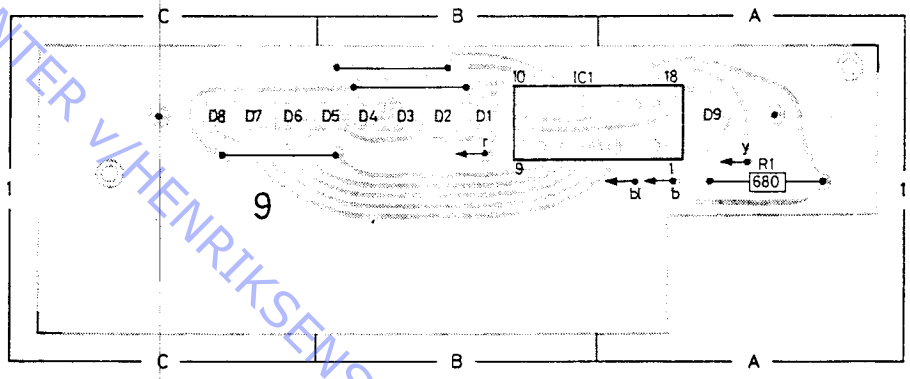

For Service Manuals Contact
MAURITRON TECHNICAL SERVICES
8 Cherry Tree Rd, Chinnor
Oxon OX9 4QY
Tel:- 01844-351694 Fax:- 01844-352554
Email:- enquiries@mauritron.co.uk

PC Drawings are seen from copperfoil side

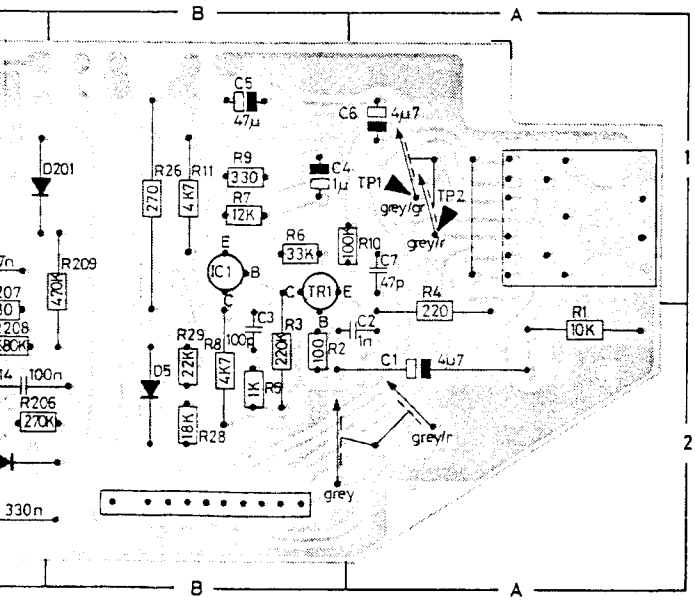

LEDNINGSFARVER COLOUR OF WIRES		KABELFARBEN COULEURS DES FILS		
b	black	schwartz	sort	noir
bl	blue	blau	blå	bleu
br	brown	braun	brun	brun
gr	green	grün	grøn	vert
grey	grey	grau	grå	gris
or	orange	orange	orange	orange
r	red	rot	rød	rouge
v	violet	violett	violet	violet
wh	white	weiss	hvid	blanc
y	yellow	gelb	gul	gaune

ABO-CENTER V/HENRIKSENS ELEKTRONIK

FM, AM and stereodecoder, 8002336, PC2

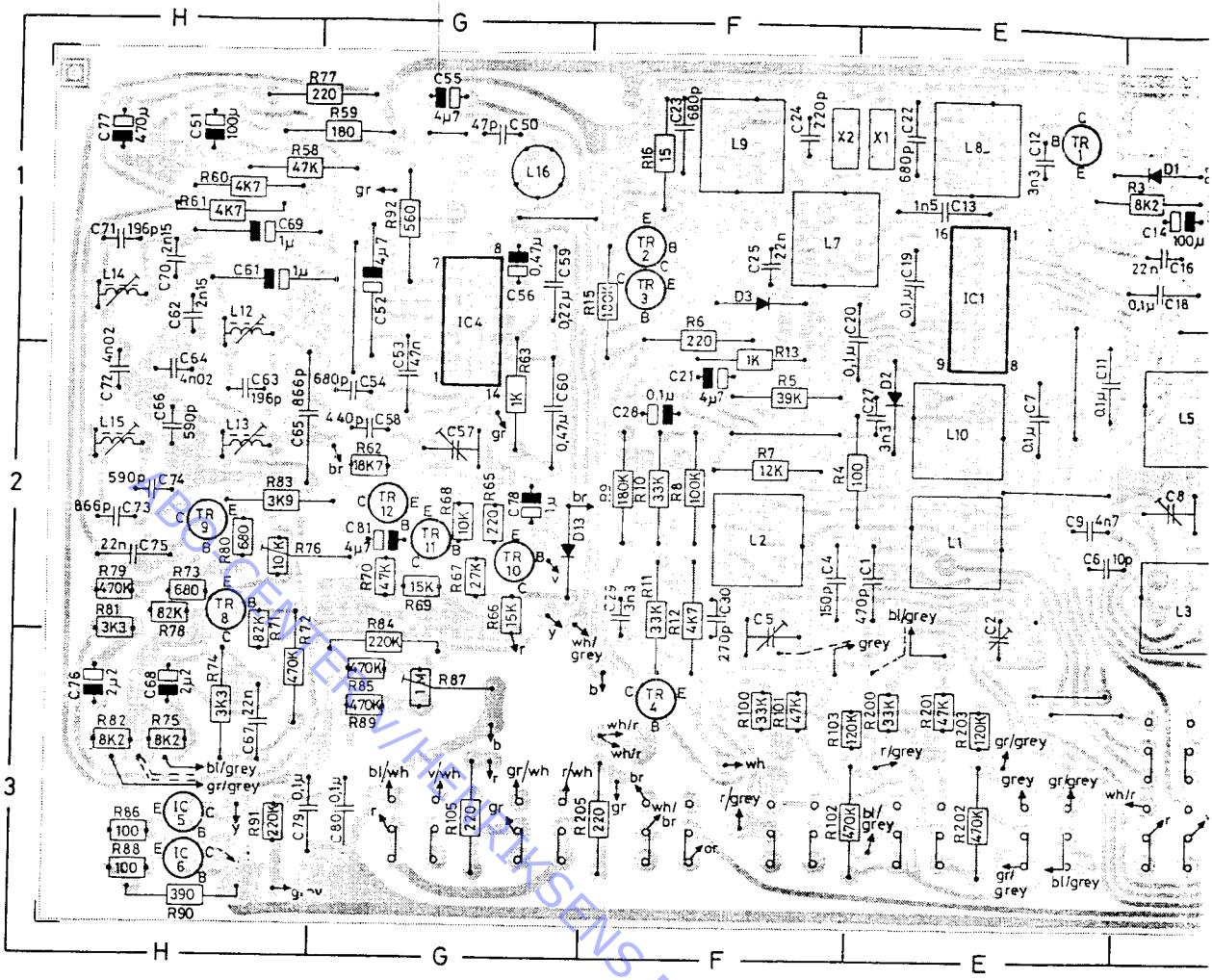

Front-end, tuner, 8050071, PC1

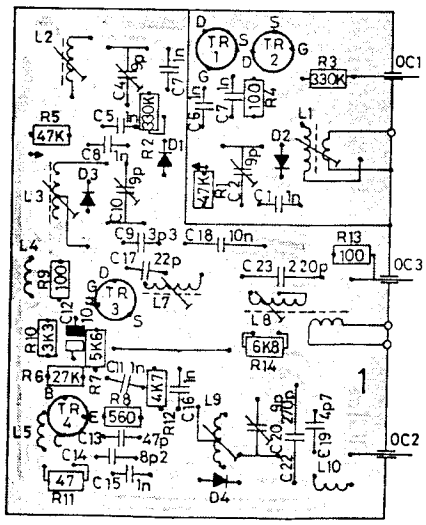

For Service Manuals Contact
MAURITRON TECHNICAL SERVICES
8 Cherry Tree Rd, Chinnor
Oxon OX9 4QY
Tel:- 01844-351694 Fax:- 01844-352554
Email:- enquiries@mauritron.co.uk

Output amplifier and power supply

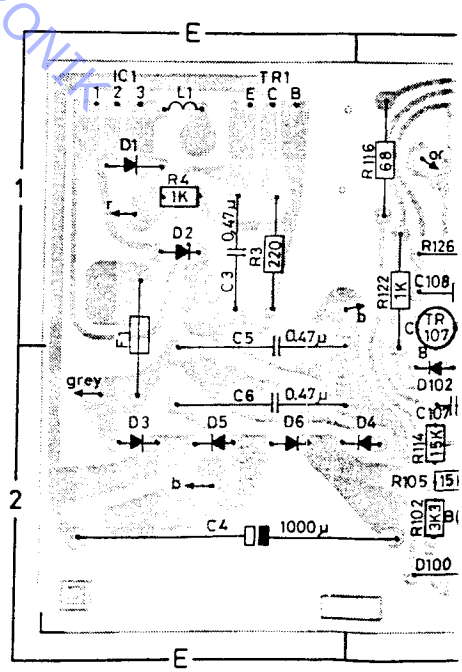

PC Drawings are seen from copperfoil side

SERVICE CENTER "HERRYSENS ELEKTRONIK"

r, 8002336, PC2

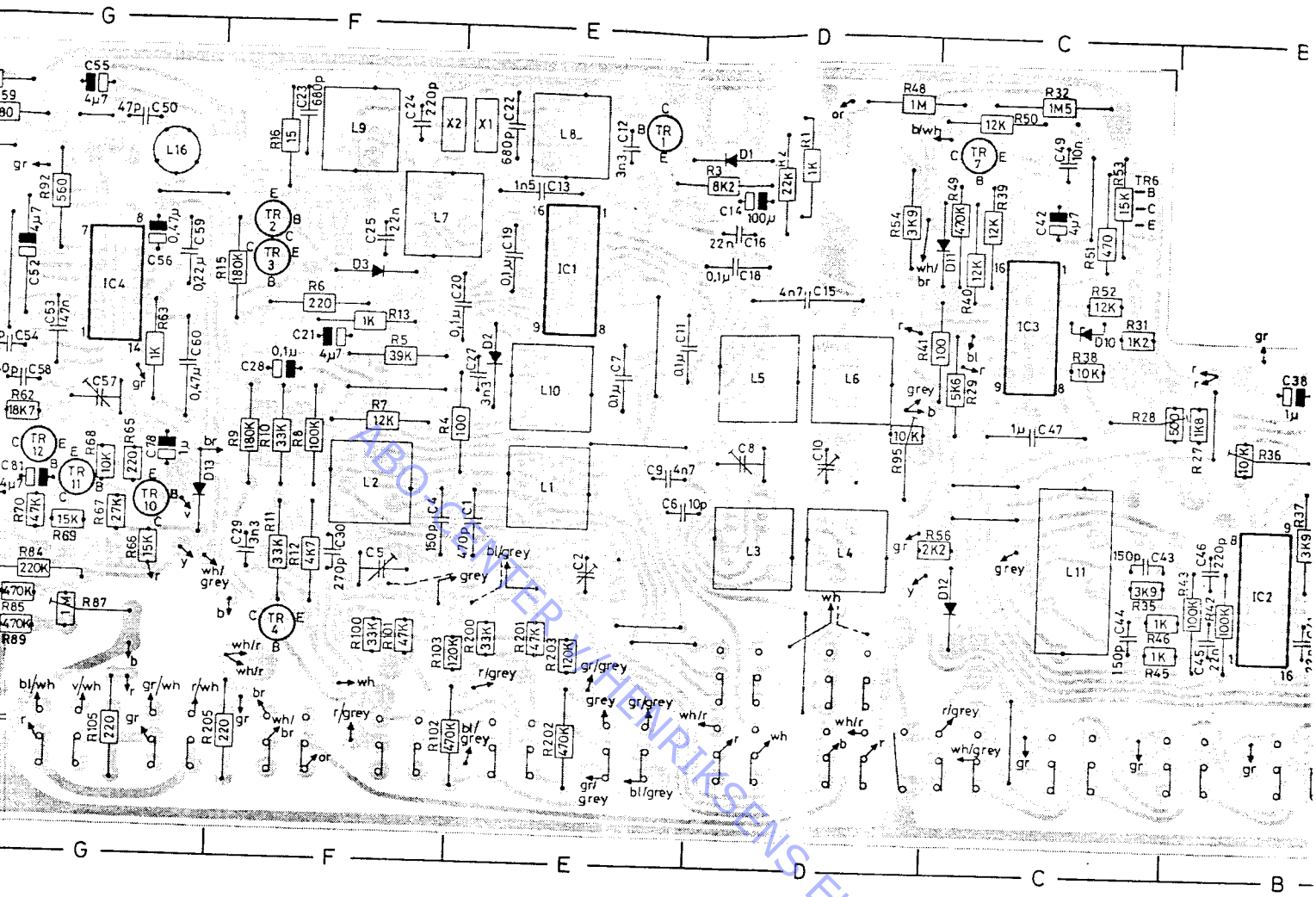

Output amplifier and power supply 8002301, PC6

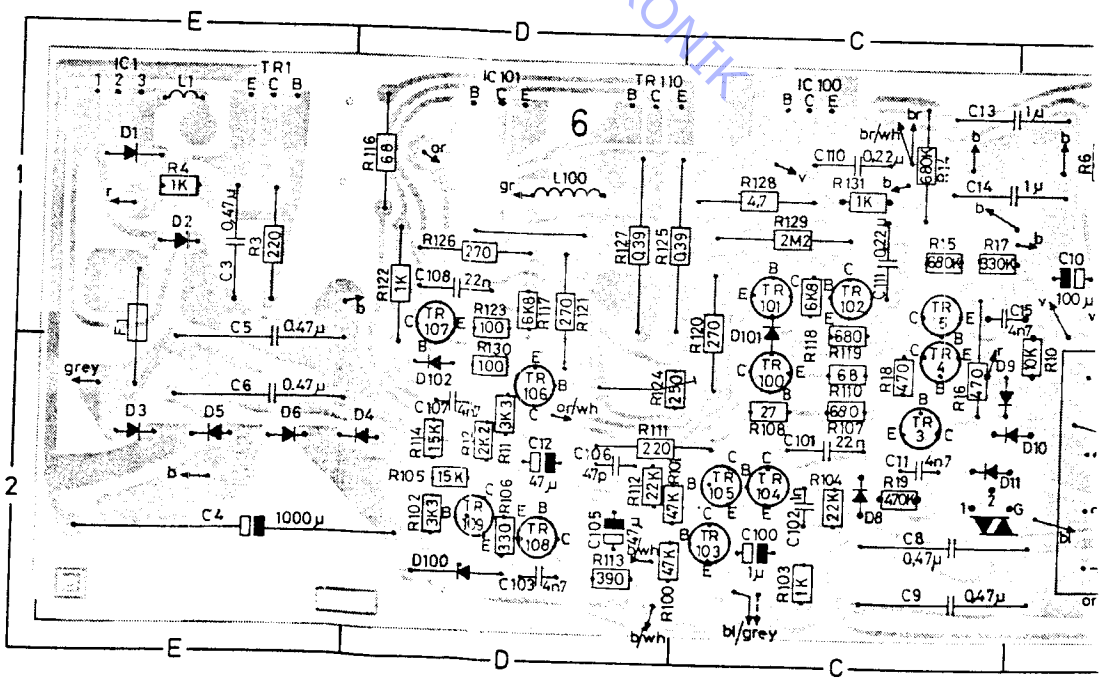

ABO-CENTERV HENRIKSENS ELEKTRONIK

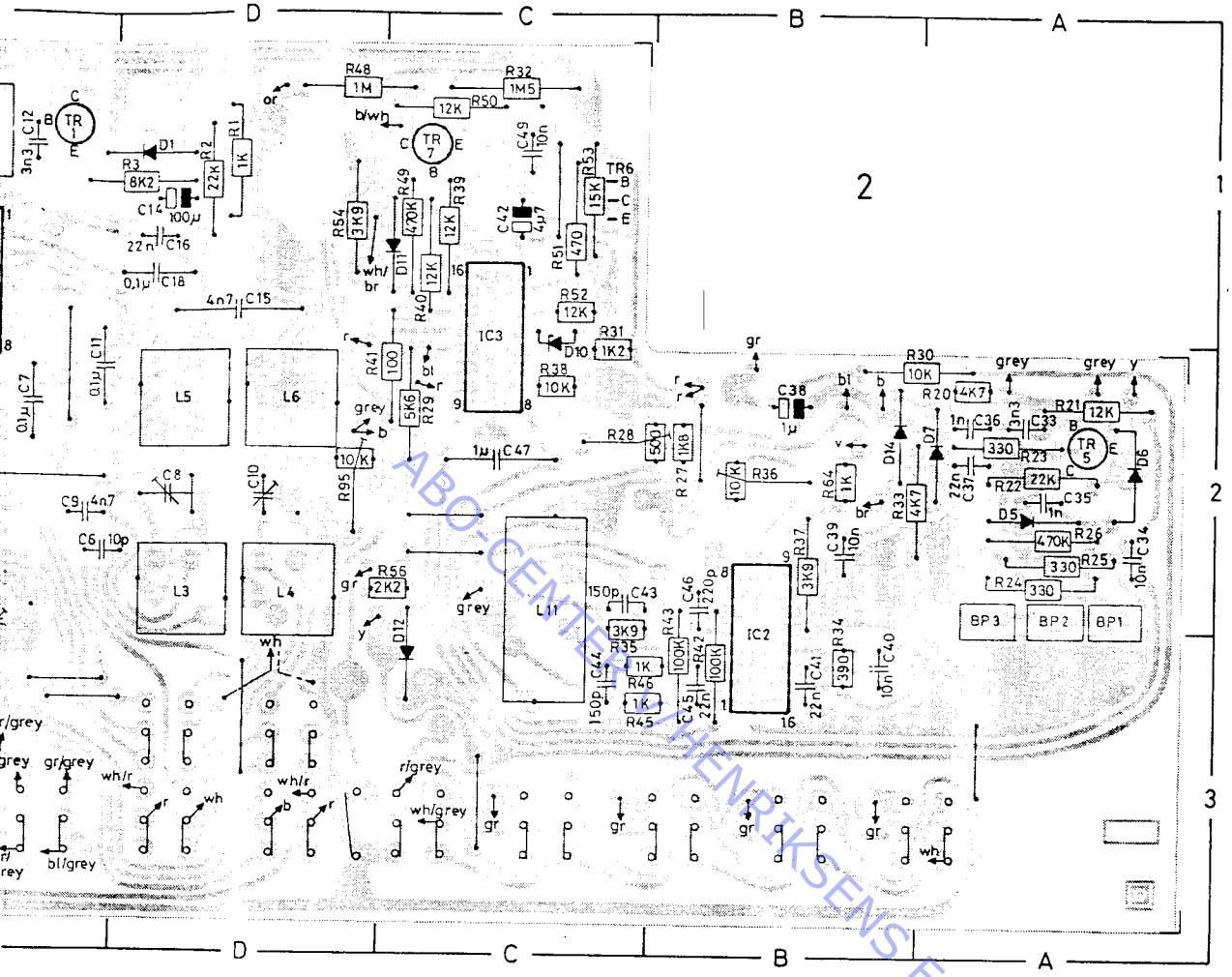

ABO-CENTER HENRIKSENS ELEKTRONIK

For Service Manuals Contact
MAURITRON TECHNICAL SERVICES
8 Cherry Tree Rd, Chinnor
Oxon OX9 4QY
Tel:- 01844-351694 Fax:- 01844-352554
Email:- enquiries@mauritron.co.uk

and power supply 8002301. PC6

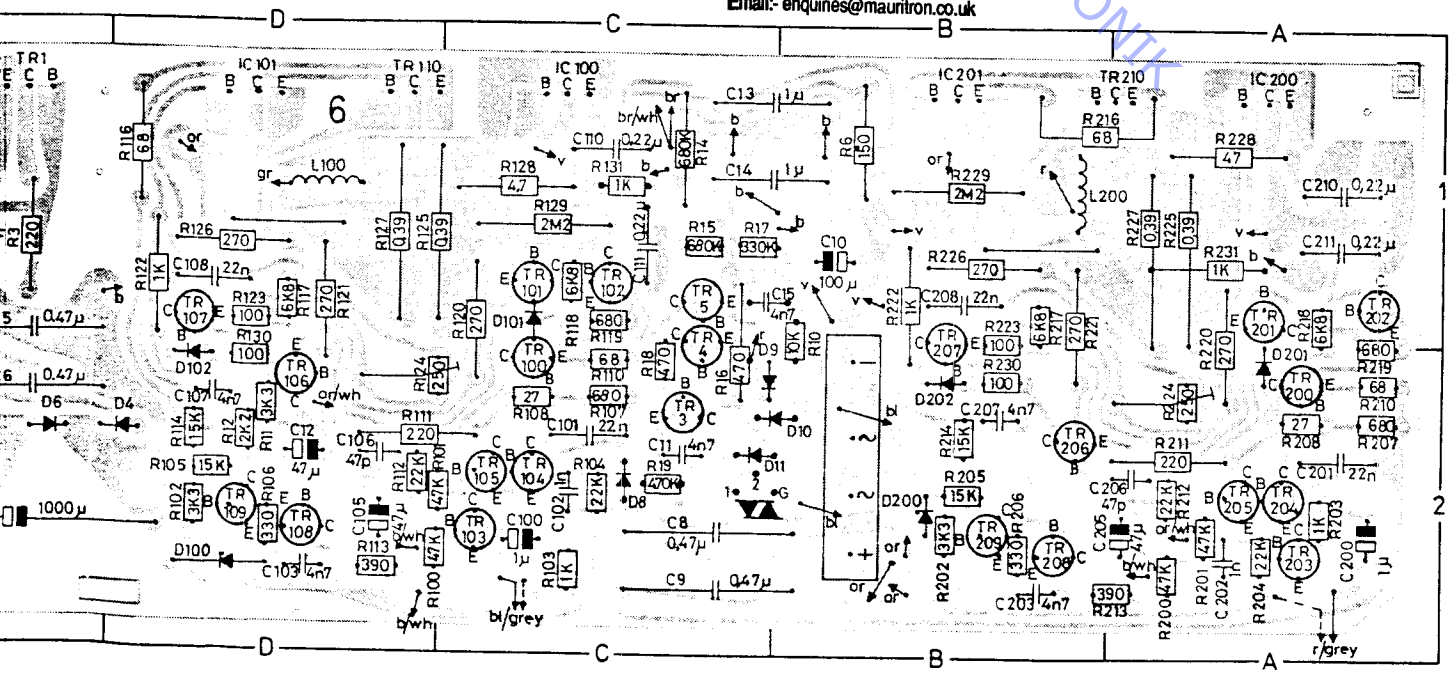

Tape amplifier, 8004172, PC7

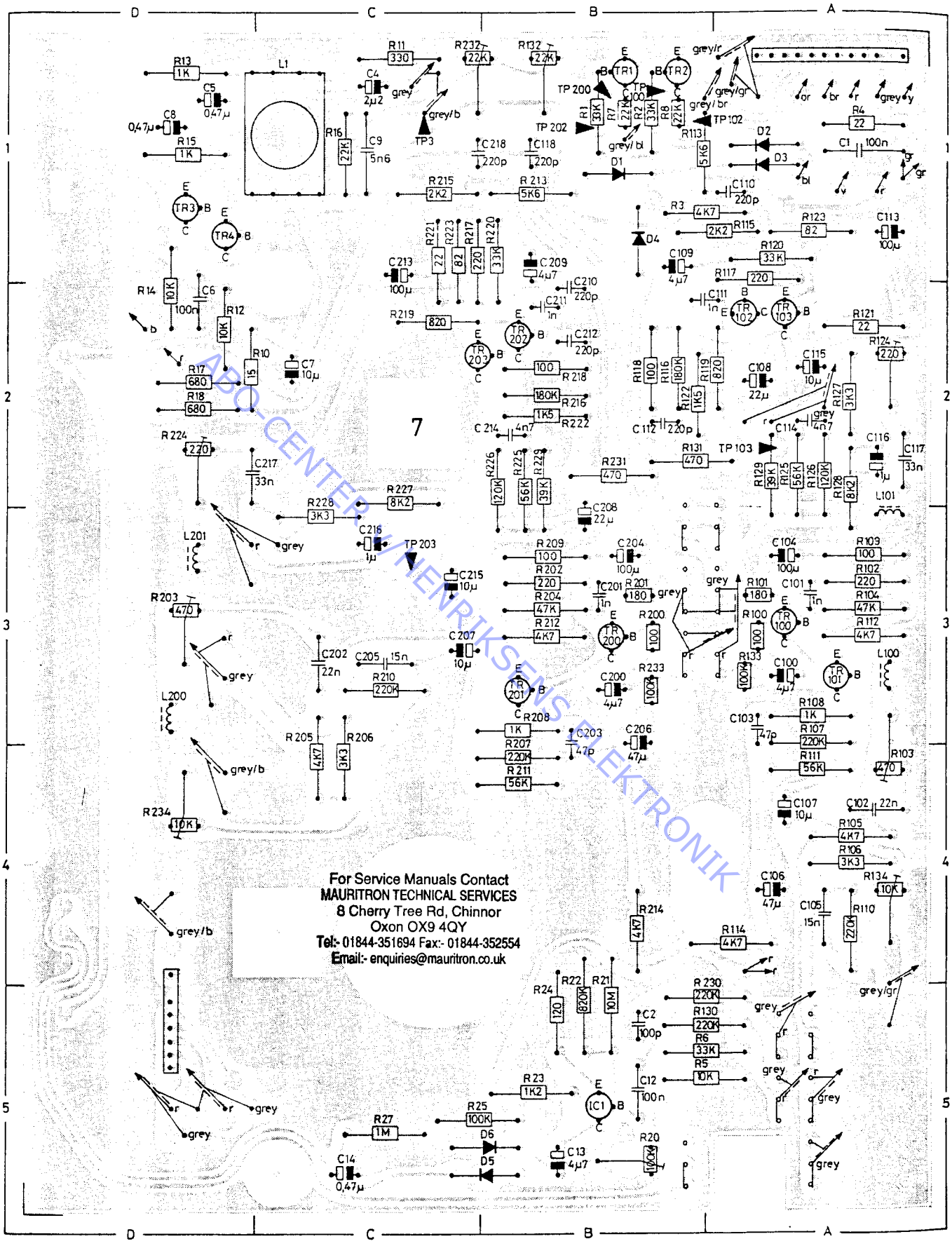

ABC-CENTER/HENRIKSENS ELEKTRONIK

Block diagrams for IC's
2IC1, TCA440

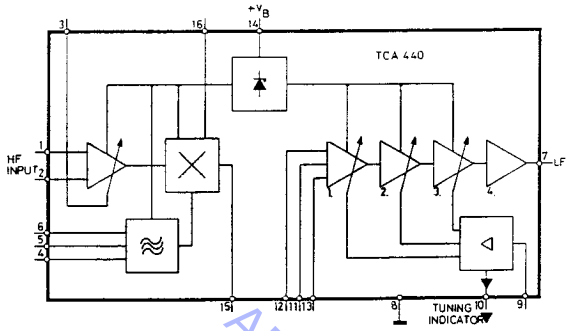

2IC2, TCA 420A

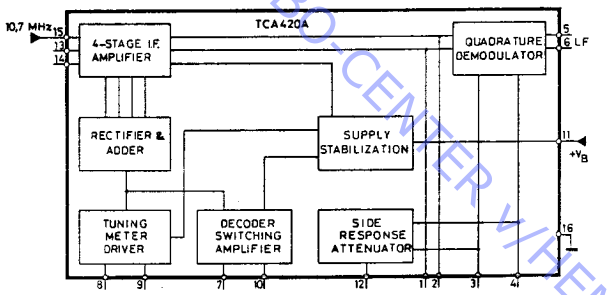

2IC3, TCA 750

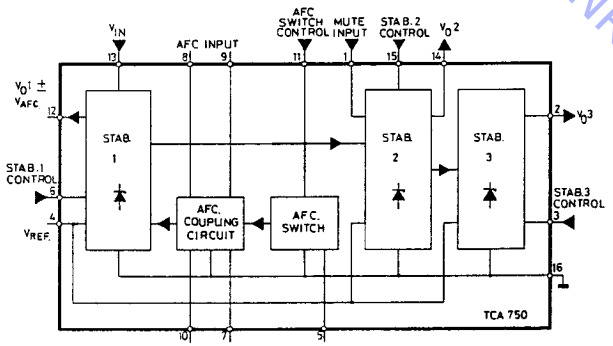

2IC4, MC 1310

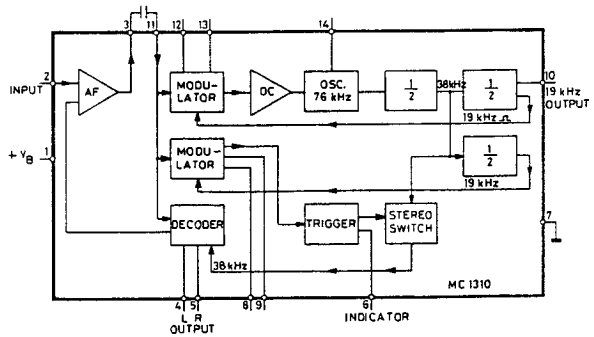

ABO-CENTER V/HENRIKSENS ELEKTRONIK

TRANSISTOR AND IC LIST

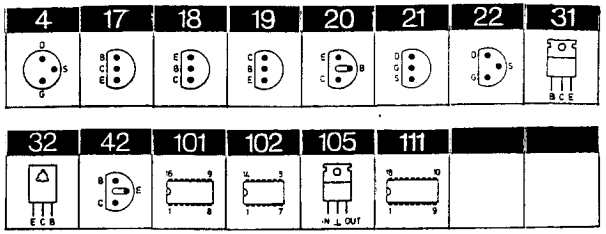

1TR1	8320119	21	TIS 88A
1TR2		21	2N 5245
		4	U 1981E
		22	2N 5245
1TR3	8320136	21	TIS 88A
		21	3C2
		4	U 1981E
		21	SDF 2060
1TR4	8320112	42	BF 495
		42	BF 255
2TR1	8320108	20	BC 248B
2TR2		20	BC 183B/BK
		17	BC 183BL
		20	BC 238B
		20	BC 172B
2TR3	8320324	19	MPSA-55
2TR4	8320108	20	BC 548B
		20	BC 183B/BK
		17	BC 183BL
		20	BC 238B
		20	BC 172B
2TR5	8320311	42	BF 240
2TR6	8320239	32	BD 135/W
2TR7	8320097	20	BC 547B
		20	BC 182B/BK
		17	BC 182BL
		20	BC 171
		20	BC 237B
2TR8	8320285	20	BC 548B
2TR9		20	BC 183C/CK
		17	BC 183CL
2TR10	8320097	20	BC 547B
2TR11		20	BC 182B/BK
2TR12		17	BC 182BL
		20	BC 171
		20	BC 237B
2IC1	8340031	101	TCA 440

2IC2	8340033	101	TCA 420A
2IC3	8340090	101	TCA 750
2IC4	8340103	102	MC 1310
		102	CA 1310E
		102	MC 1310N
2IC5	8340054	19	MPSA-13
2IC6			
4TR100/200	8320344*	20	BC 550B
		20	BC 384B/N
4TR101/201	8320097	20	BC 547B
		20	BC 182B/BK
		17	BC 182BL
		20	BC 171
		20	237B
4IC100/200	8340054	19	MPSA-13
4IC101/201			
5TR1	8320152	20	BC 557B
5TR2		20	BC 212B/BK
5TR3		17	BC 212BL
		18	BC 307B
		20	BC 251B
5TR4	8320323	19	MPSA-05
5TR5	8320292	32	BD 137/W
6TR1	8320296	32	BD 226
6TR3	8320408	20	BC 556B
6TR4	8320409	20	BC 546B
6TR5			
6TR100/200	8320365	19	MPSH-54
6TR101/201	8320097	20	BC 547B
		20	BC 182B/BK
		17	BC 182BL
		20	BC 171
		20	BC 237B
6TR102/202	8320323	19	MPSA-05

For Service Manuals Contact
MAURITRON TECHNICAL SERVICES
8 Cherry Tree Rd, Chinnor
Oxon OX9 4QY
Tel: 01844-351694 Fax: 01844-352554
Email: enquiries@mauritron.co.uk

6TR103/203	8320097	20	BC 547B
		20	BC 182B/BK
		17	BC 182BL
		20	BC 171
		20	BC 237B
6TR104/204	8320377	20	BC 547B
6TR105/205		20	BC 182C/CK
		17	BC 182CL
6TR106/206	8320152	20	BC 557B
		20	BC 212B/BK
		17	BC 212BL
		18	BC 307B
		20	BC 251B
6TR107/207	8320323	19	MPSA-05
6TR108/208	8320097	20	BC 547B
6TR109/209		20	BC 182B/BK
		17	BC 182BL
		20	BC 171
		20	BC 237B
6TR110/210	8320383	32	BD 135
		32	BD 135S
6IC1	8340126	105	µA78M24CU
6IC100/200	8340117	31	BDX 33A
6IC101/201	8340118	31	BDX 34A

7TR1	8320237	20	BC 546B
7TR2			
7TR3	8320137	20	BC 182B/BK
7TR4		17	BC 182BL
7TR100/200	8320344*	20	BC 550B
		20	BC 384B/N
7TR101/201	8320095*	20	BC 549B
7TR102/202		20	BC 184B/N
7TR103/203	8320097	20	BC 547B
		20	BC 182B/BK
		17	BC 182BL
		20	BC 171
		20	BC 237B
7IC1	8340054	19	MPSA-13
8TR1	8320344*	20	BC 550B
		20	BC 384B/N
8IC1	8340054	19	MPSA-13
8IC100/200	8340046	101	NE 545N
9IC1	8340097	111	UAA 180

* Speciel udvalgt eller bearbejdet eksemplar
* Specially selected or adapted sample
* Speziell ausgewähltes und bearbeitets Exemplar

For Service Manuals Contact
MAURITRON TECHNICAL SERVICES
8 Cherry Tree Rd, Chinnor
Oxon OX9 4QY
Tel:- 01844-351694 Fax:- 01844-352554
Email:- enquiries@mauritron.co.uk

ABO-CENTER V.HENRIKSENS ELEKTRONIK

DIODE LIST

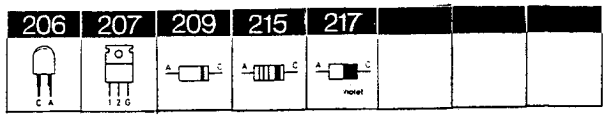

0D1	8300256	206	CQX 11
0D2-4	8300255	206	CQX 10
1D1	8300041	209	BB 103green
1D2	8300050	209	BB 103blue
1D3	8300041	209	BB 103green
1D4	8300295	209	BB 103blue
2D1	8300058	217	SFD 184
		215	1N 4148
		209	1N 4148
2D2	8300024	209	AA 119
2D3-9	8300058	217	SFD 184
		215	1N 4148
		209	1N 4148
2D10	8300283	209	BZV 38
2D11-13	8300058	217	SFD 184
5D1		215	1N 4148
		209	1N 4148
5D2	8300023	209	1N 4002/RL
		209	1N 4003
5D3	8300058	217	SFD 184
		215	1N 4148
		209	1N 4148
6D1	8300023	209	1N 4002/RL
		209	1N 4003
6D2	8300028	209	ZPD 9.1V 5%
		209	BZX 79
			C9V1
		209	BZX 83
			C9V1
6D3-6	8300023	209	1N 4002/RL
		209	1N 4003
6D7	8310020		B80C3200/
			2200

6D8-9	8300058	217	SFD 184
		215	1N 4148
		209	1N 4148
6D10-11	8300294	209	MR 501
		209	1N 5401
6D100/200	8300029	209	ZPD 12V 5%
		209	BZX 79
			C12V0
		209	BZX 83
			C12V0
6D101/201	8300058	217	SFD 184
6D102/202		215	1N 4148
		209	1N 4148
6SCS1	8300230	207	2N 6342A/W
		207	T 2800B
7D1	8300028	209	ZPD 9.1V 5%
		209	BZX 79
			C9V1
		209	BZX 83
			C9V1
7D2-6	8300058	217	SFD 184
		215	1N 4148
		209	1N 4148
8D1	8300023	209	1N 4002/RL
		209	1N 4003
8D5	8300034	209	ZY 12 5%1W
		209	LMZ 12
8D100/200	8300042	209	OA 91
8D101/201	8300058	217	SFD 184
		215	1N 4148
		209	1N 4148
9D1-6	8300256	206	CQX 11
9D7-9	8300255	206	CQX 10

ELECTRICAL PARTS LIST

0R1	5300100	100 kohms Tuning FM			

0C1	4010018	1 nF 250 V	0C6	4310011	Var. capacitor
0C2	4010018	1 nF 250 V	0C7	4200361	5000µF 35 V
0C3	4010018	1 nF 250 V	0C8	4200361	5000µF 35 V

0F1	6600010	4 A-T/250 V IEC 127 SLOW	0T1	8010020	Aerial transformer
0F2	6600010	4 A-T/250 V IEC 127 SLOW			

Front end, tuner, 8050071, PC1

R1	5001050	47 kohms ± 10% 1/2 W	R8	5010067	560 ohms ±5% 1/8 W
R2	5001062	330 kohms ± 10% 1/2 W	R9	5001013	100 ohms ± 10% 1/2 W
R3	5001062	330 kohms ± 10% 1/2 W	R10	5010076	3.3 kohms ± 5% 1/8 W
R4	5001013	100 ohms ± 20% 1/2 W	R11	5010411	47 ohms ± 5% 1/8 W
R5	5001050	47 kohms ± 10% 1/2 W	R12	5001038	4.7 kohms ± 10% 1/2 W
R6	5010141	27 kohms ± 5% 1/8 W	R13	5001013	100 ohms ± 10% 1/2 W
R7	5010041	5.6 kohms ± 5% 1/8 W	R14	5001040	6.8 kohms ± 10% 1/2 W

C1	4010008	1 nF −20 +50% 400 V	C13	4003130	47 nF ± 2% 63 V
C2	4330001	9 pF Cer	C14	4010015	8.2 pF ± 0,25 pF 63 V
C3	4010008	1 nF −20 +50% 400 V	C15	4010008	1 nF −20 +50% 400 V
C4	4330001	9 pF Cer	C16	4010008	1 nF −20 +50% 400 V
C5	4010008	1 nF −20 +50% 400 V	C17	4003059	22 pF ± 5% 250 V
C6	4010008	1 nF −20 +50% 400 V	C18	4130081	10 nF ± 0% 250 V
C7	4010008	1 nF −20 +50% 400 V	C19	4000020	4.7 pF ± 0.25 pF 63 V
C8	4010008	1 nF −20 +50% 400 V	C20	4330001	9 pF Cer.
C9	4003012	3.3 pF ± 0,25 pF 400 V	C22	4101031	270 pF ± 5% 63 V
C10	4330001	9 pF Cer	C23	4101007	220 pF ± 5% 63 V
C11	4010008	1 nF −20 +50% 400 V			
C12	4200107	10µF 10 V			

L1	8020304	Aerial coil	L6	6710001	Ferrit tube 3×1.2×3.5mm
L2	8020121	RF (prim.)	L7	8020124	10.7 MHz
L3	8020122	RF (sec.)	L8	8020137	10.7 MHz
L4	6830052	3.8µH ± 5%	L9	8020183	OSC.
L5	6830052	3.8µH 5%	L10	6830052	3.8µH ± 5%

	6702001	Ferrit-core F 100(white)		7210173	Phono socket
	6702008	Ferrit-core F10 (red)		7220148	Phono plug
	6479001	Glassbushing			

FM, AM and stereo decoder, 8002336, PC2

R1	5010040	1 kohms ± 5% 1/8 W	R33	5010048	4.7 kohms ± 5% 1/8 W
R2	5010079	22 kohms ± 5% 1/8 W	R34	5010070	390 ohms ± 5% 1/8 W
R3	5001041	8.2 kohms ± 10% 1/2 W	R35	5010069	3.9 kohms ± 5% 1/8 W
R4	5001013	100 ohms ± 10% 1/2 W	R36	5370074	10 kohms ± 20% 0.1 W
R5	5001049	39 kohms ± 10% 1/2 W	R37	5010069	3.9 kohms ± 5% 1/8 W
R6	5001019	220 ohms ± 10% 1/2 W	R38	5010059	10 kohms ± 5% 1/8 W
R7	5001043	12 kohms ± 10% 1/2 W	R39	5010046	12 kohms ± 5% 1/8 W
R8	5001055	100 kohms ± 10% 1/2 W	R40	5010046	12 kohms ± 5% 1/8 W
R9	5001058	180 kohms ± 10% 1/2 W	R41	5010065	100 ohms ± 5% 1/8 W
R10	5010075	33 kohms ± 5% 1/8 W	R42	5010049	100 kohms ± 5% 1/8 W
R11	5010075	33 kohms ± 5% 1/8 W	R43	5010049	100 kohms ± 5% 1/8 W
R12	5001038	4.7 kohms ± 10% 1/2 W	R45	5010040	1 kohms ± 5% 1/8 W
R13	5010040	1 kohms ± 5% 1/8 W	R46	5010040	1 kohms ± 5% 1/8 W
R15	5010072	180 kohms ± 5% 1/8 W	R48	5010054	1 Mohms ± 1/8 W
R16	5010468	15 ohms ± 5% 1/8 W	R49	5010077	470 kohms ± 5% 1/8 W
R20	5010048	4.7 kohms ± 5% 1/8 W	R50	5001043	12 kohms ± 10% 1/2 W
R21	5010046	12 kohms ± 5% 1/8 W	R51	5010058	470 ohms ± 5% 1/8 W
R22	5010079	22 kohms ± 5% 1/8 W	R52	5010046	12 kohms ± 5% 1/8 W
R23	5010044	330 ohms ± 5% 1/8 W	R53	5010053	15 kohms ± 5% 1/8 W
R24	5010044	330 ohms ± 5% 1/8 W	R54	5010069	3.9 kohms ± 5% 1/8 W
R25	5010044	330 ohms ± 5% 1/8W	R56	5010064	2.2 kohms ± 5% 1/8 W
R26	5010077	470 kohms ± 5% 1/8 w	R58	5010045	47 kohms ± 5% 1/8 W
R27	5010066	1.8 kohms ± 5% 1/8 W	R59	5010362	180 ohms ± 5% 1/8 W
R28	5370002	500 ohms ± 0% 0.1 W	R60	5010048	4.7 kohms ± 5% 1/8 W
R29	5010041	5.6 kohms ± 5% 1/8 W	R61	5010048	4.7 kohms ± 5% 1/8 W
R30	5010059	10 kohms ± 5% 1/8 W	R62	5020034	18.7 kohms ± 1% 1/8 W
R31	5010153	1.2 kohms ± 5% 1/8 W	R63	5010040	1 kohms ± 5% 1/8 W
R32	5010343	1.5 Mohms ± 5% 1/8 W	R64	5010040	1 kohms ± 5% 1/8 W
			R65	5010092	220 ohms ± 5% 1/8 W
			R66	5010053	15 kohms ± 5% 1/8 W
			R67	5010141	27 kohms ± 5% 1/8 W
			R68	5010059	10 kohms ± 5% 1/8 W

R69	5010053	15 kohms ± 5% 1/8 W	R84	5010120	220 kohms ± 5% 1/8 W
R70	5010045	47 kohms ± 5% 1/8 W	R85	5010077	470 kohms ± 5% 1/8 W
R71	5010091	82 kohms ± 5% 1/8 W	R86	5010065	100 ohms ± 5% 1/8 W
R72	5010077	470 kohms ± 5% 1/8 W	R87	5370049	1 Mohms ± 20% 0.1 W
R73	5010144	680 ohms ± 5% 1/8 W	R88	5010065	100 ohms ± 5% 1/8 W
R74	5010076	3.3 kohms ± 5% 1/8 W	R89	5010077	470 kohms ± 5% 1/8 W
R75	5010154	8.2 kohms ± 5% 1/8 W	R90	5001022	390 ohms ± 10% 1/2 W
R76	5370074	10 kohms ± 20% 0.1 W	R91	5010120	220 kohms ± 5% 1/8 W
R77	5010092	220 ohms ± 5% 1/8 W	R92	5001025	560 ohms ± 10% 1/2 W
R78	5010091	82 kohms ± 5% 1/8 W	R95	5370074	10 kohms ± 20% 0.1 W
R79	5010077	470 kohms ± 5% 1/8 W	R100	5010075	33 kohms ± 5% 1/8 W
R80	5010144	680 kohms ± 5% 1/8 W	R101	5010045	47 kohms ± 5% 1/8 W
R81	5010076	3.3 kohms ± 5% 1/8 W	R102	5010077	470 kohms ± 5% 1/8 W
R82	5010154	8.2 kohms ± 5% 1/8 W	R103	5010047	120 kohms ± 5% 1/8 W
R83	5010069	3.9 kohms ± 5% 1/8 W	R105	5001019	220 ohms ± 10% 1/2 W

C1	4100073	470 pF ± 5% 63 V	C44	4000094	150 pF ± 5% 63 V
C2	4340002	2 - 22 pF	C45	4010060	22 nF ÷20 +100% 40 V
C4	4101034	150 pF ±2,5% 63 V	C46	4000029	220 pF ± 5% 63 V
C5	4340003	5.5 - 6.5 pF	C47	4130136	1 µF ± 20% 100 V
C6	4000016	10 pF ± 2% 63 V	C49	4010041	10 nF ÷20 +100% 40 V
C7	4130103	0.1 µF ± 20% 250 V	C50	4003130	47 pF ± 63 V
C8	4340003	5.5 - 65 pF	C51	4200099	100 µF 16 V
C9	4010071	4.7 nF ± 10% 63 V	C52	4201061	4.7 µF 63 V
C10	4340002	2 - 22 pF	C53	4130087	47 nF ± 10% 250 V
C11	4130103	0.1 µF ± 20% 250 V	C54	4101004	680 pF ± 5% 63 V
C12	4011025	3.3 nF ± 10% 100 V	C55	4201061	4.7 µF 63 V
C13	4102111	1.5 nF ± 5% 160 V	C56	4201058	0.47 µF 35 V
C14	4200171	100 µF 3V	C57	4340003	5.5 −65 pF
C15	4101026	4.7 nF ± 5% 63 V	C58	4100044	440 pF ± 1% 63 V
C16	4010060	22 nF −20 +100% 40 V	C59	4130104	0.22 µF ± 20% 100 V
C17	4101008	180 pF ± 5% 63 V	C60	4130114	0.47 µF ± 10% 100 V
C18	4130103	0.1 µF ± 20% 250 V	C61	4200298	1 µF 63 V
C19	4130103	0.1 µF ± 20% 250 V	C62	4100081	2.15 nF ± 2.5% 63 V
C20	4130103	0.1 µF ± 20% 250 V	C63	4100077	196 pF ± 2.5% 63 V
C21	4200108	4.7 µF 25 V	C64	4100078	4.02 nF ± 2.5% 63 V
C22	4100097	680 pF ± 5% 63 V	C65	4100080	866 pF ± 2.5% 63 V
C23	4100097	680 pF ± 5% 63 V	C66	4100079	590 pF ± 2.5% 63 V
C24	4000029	220 pF ± 5% 63 V	C67	4130089	22 nF ± 10% 250 V
C25	4010060	22 nF −20 +100% 40 V	C68	4201035	2.2 µF 63 V
C26	4100002	1.6 nF 5% 25 V	C69	4200298	1 µF 63 V
C27	4011025	3.3 nF ± 10% 100 V	C70	4100081	2.15 nF ± 2.5% 63 V
C28	4200169	0.1 µF 35 V	C71	4100077	196 pF ± 2.5% 63 V
C29	4011025	3.3 nF ± 10% 100 V	C72	4100078	4.02 nF ± 2.5% 63 V
C30	4000071	270 pF ± 5% 63 V	C73	4100080	866 pF ± 2.5% 63 V
C33	4011025	3.3 nF ± 10% 100 V	C74	4100079	590 pF ± 2.5% 63 V
C34	4010041	10 nF ÷20 +100% 40 V	C75	4130089	22 nF ± 10% 250 V
C35	4010027	1 nF ± 10% 100 V	C76	4201035	2.2 µF 63 V
C36	4010027	1 nF ± 10% 100 V	C77	4200304	470 µF 40 V
C37	4010060	22 nF ÷20 +100% 40 V	C78	4201057	1 µF 35 V
C38	4200298	1 µF 63 V	C79	4130103	0.1 µF ± 20% 250 V
C39	4010041	10 nF ÷20 +100% 40 V	C80	4130103	0.1 µF ± 20% 250 V
C40	4010041	10 nF ÷20 +100% 40 V	C81	4200108	4.7 µF 25 V
C41	4010060	22 nF ÷20 +100% 40 V			
C42	4201061	4.7 µF 63 V			
C43	4000094	150 pF ± 5% 63 V			

L1	8020262	MW OSC.	L9	8020264	AM IF
L2	8020261	LW OSC.	L10	8020265	AM DET.
L3	8020219	LW RF	L11	8010141	FM DET.
L4	8020106	MW RF	L12	8022079	78 mH
L5	8020222	468 kHz filter	L13	8022079	78 mH
L6	8020114	468 kHz filter	L14	8022079	78 mH
L7	8020263	AM IF	L15	8022079	78 mH
L8	8020224	AM IF	L16	8022066	114 kHz

BP1	8030001	10.7 MHz filter		7400160	Pushbutton switch
BP2	8030001	10.7 MHz filter		7450043	Mains switch
BP3	8030001	10.7 MHz filter			
X1	8030006	468 kHz filter			
X2	8030006	468 kHz filter			

FM preset, 8002286, PC3

R1	5320017	100 kohms	R3	5320017	100 kohms
R2	5320017	100 kohms	R4	5320017	100 kohms

For Service Manuals Contact
MAURITRON TECHNICAL SERVICES
8 Cherry Tree Rd, Chinnor
Oxon OX9 4QY
Tel:- 01844-351694 Fax:- 01844-352554
Email:- enquiries@mauritron.co.uk

ABO-CENTER/HENRIKSENS ELEKTRONIK

Tone control and pre-amplifier, 8002318, PC4

R1	5010611	150 ohms ± 5% 1/8 W	R121	5010066	1.8 kohms ± 5% 1/8 W
R100	5010092	220 ohms ± 1/8 W	R122	5010041	5.6 kohms ± 5% 1/8 W
R101	5010045	47 kohms ± 5% 1/8 W	R123	5310074	2 × 22 kohms TREBLE
R102	5010083	270 kohms ± 5% 1/8 W	R124	5010063	150 kohms ± 5% 1/8 W
R103	5010066	1.8 kohms ± 5% 1/8 W	R125	5010076	3.3 kohms ± 5% 1/8 W
R104	5010048	4.7 kohms ± 5% 1/8 W	R126	5310074	2 × 22 kohms BASS
R105	5010047	120 kohms ± 5% 1/8 W	R127	5010066	1.8 kohms ± 5% 1/8 W
R106	5010058	470 ohms ± 5% 1/8 W	R128	5010041	5.6 kohms ± 5% 1/8 W
R107	5010044	330 ohms ± 5% 1/8 W	R129	5010040	1 kohms ± 5% 1/8 W
R108	5010362	180 ohms ± 5% 1/8 W	R131	5010048	4.7 kohms ± 5% 1/8 W
R109	5020019	36 kohms ± 2% 1/8 W	R132	5010063	150 kohms ± 5% 1/8 W
R110	5010120	220 kohms ± 5% 1/8 W	R133	5010079	22 kohms ± 5% 1/8 W
R112	5010049	100 kohms ± 5% 1/8 W	R134	5010079	22 kohms ± 5% 1/8 W
R117	5011078	4.7 Mohms ± % 1/4 W	R135	5010611	150 ohms ± 5% 1/8 W
R118	5010041	5.6 kohms ± 5% 1/8 W	R136	5310040	2 × 22 kohms VOL.
R119	5010059	10 kohms ± 5% 1/4 W	R137	5010065	100 ohms ± 5% 1/8 W
R120	5011071	1.5 Mohms ± 5% 1/4 W	R138	5310073	2 × 22 kohms BAL.

C1	4200299	220 µF 40 V	C112	4130109	10 nF ± 10% 250 V
C100	4200296	2.2 µF 63 V	C113	4010024	470 pF ± 10% 100 V
C101	4010021	220 pF ± 10% 100 V	C114	4130109	10 nF ± 10% 250 V
C102	4130100	68 nF ± 10% 250 V	C115	4130100	68 nF ± 10% 250 V
C104	4000078	68 pF ± 2% 63 V	C116	4130100	68 nF ± 10% 250 V
C105	4200296	2.2 µF 63 V	C117	4201065	10 µF 63 V
C106	4010065	2.7 nF ±10% 63 V	C118	4010027	1 nF ± 10% 100 V
C107	4130109	10 nF ± 10% 250 V	C120	4201065	10 µF 63 V
C110	4200296	2.2 µF 63 V	C121	4200296	2.2 µF 63 V
C111	4201035	2.2 µF 63 V	C122	4200299	220 µF 40 V

	7220131	Socket 3 pol.

Auto. stop, 8004175, PC5

R1	5001042	10 kohms ± 10% 1/2 W	R9	5010053	15 kohms ± 5% 1/8 W
R2	5001034	2.2 kohms ± 10% 1/2W	R10	5010052	6.8 kohms ± 5% 1/8 W
R3	5010054	1 Mohms ± 5% 1/8 W	R11	5010063	150 kohms ± 5% 1/8 W
R4	5001029	1 kohms ± 10% 1/2 W	R12	5010060	39 kohms ± 5% 1/8 W
R5	5010045	47 kohms ± 10% 1/8 W	R13	5001033	1.8 kohms ± 10% 1/2 W
R6	5001044	15 kohms ± 10% 1/2 W	R14	5010052	6.8 kohms ± 5% 1/8 W
R7	5010066	1.8 kohms ± 5% 1/8 W	R15	5001034	2.2 kohms ± 10% 1/2 W
R8	5010045	47 kohms ± 5% 1/8 W	R16	5001024	470 ohms ± 10% 1/2 W

C1	4201069	2.2 µF 35 V	C3	4130099	1.3 µF ± 10% 170 V
C2	4200100	22 µF 40 V	C4	4201065	10 µF 63 V

F1	6604023	1 A-F IEC 127 QUICK	7220116	Plug 7 pol
	7500002	Fuse holder		

Output amplifier and power supply, 8002301, PC6

R3	5001019	220 ohms ± 10% 1/2 W	R110	5010039	68 ohms ± 5% 1/8 W
R4	5002024	1 kohms ± 10% 1W	R111	5010092	220 ohms ± 5% 1/8 W
R6	5010611	150 ohms ± 5% 1/8 W	R112	5010079	22 kohms ± 5% 1/8 W
R10	5010059	10 kohms ± 5% 1/8 W	R113	5010070	390 ohms ± 5% 1/8 W
R11	5010076	3.3 kohms ± 5% 1/8 W	R114	5010053	15 kohms ± 5% 1/8 W
R12	5010064	2.2 kohms ± 5% 1/8 W	R116	5010039	68 ohms ± 5% 1/8 W
R14	5010074	680 kohms ± 5% 1/8 W	R117	5011042	6.8 kohms 5% 1/4 W
R15	5010074	680 kohms ± 5% 1/8 W	R118	5011042	6.8 kohms 5% 1/4 W
R16	5010058	470 ohms ± 5% 1/8 W	R119	5010144	680 ohms ± 5% 1/8 W
R17	5010117	330 kohms ± 5% 1/8 W	R120	5010000	270 ohms ± 5% 1/8 W
R18	5010058	470 ohms ± 5% 1/8 W	R121	5010000	270 ohms ± 5% 1/8 W
R19	5010077	470 kohms ± 5% 1/8 W	R122	5010040	1 kohms ± 5% 1/8 W
R100	5010045	47 kohms ± 5% 1/8 W	R123	5010065	100 ohms ± 5% 1/8 W
R101	5010045	47 kohms ± 5% 1/8 W	R124	5370174	250 ohms ± 20% 0.1 W
R102	5010076	3.3 kohms ± 5% 1/8 W	R125	5102007	0.39 ohms ± 10% 1 W
R103	5010040	1 kohms ± 5% 1/8 W	R126	5010000	270 ohms ± 5% 1/8 W
R104	5010079	22 kohms ± 5% 1/8 W	R127	5102007	0.39 ohms ± 10% 1 W
R105	5010053	22 kohms ± 5% 1/8 W	R128	5000085	4.7 ohms ± 10% 1/2 W
R106	5010044	330 ohms ± 5% 1/8 W	R129	5011074	2.2 Mohms ± 10% 1/4 W
R107	5010144	680 ohms ± 5% 1/8 W	R130	5010065	100 ohms ± 5% 1/8 W
R108	5010403	27 ohms ± 5% 1/8 W			

C3	4130114	0.47 µF ± 10% 100 V	C15	4011022	4.7 nF ÷20 +100% 40 V
C4	4200373	1000 µF 63 V	C100	4200298	1 µF 63 V
C5	4130029	0.47 µF ± 10% 250 V	C101	4130079	22 nF ± 20 % 250 V
C6	4130029	0.47 µF ± 10% 250 V	C102	4010027	1 nF ± 10% 100 V
C8	4130029	0.47 µF ± 10% 250 V	C103	4011022	4.7 nF ÷20 +100% 40 V
C9	4130029	0.47 µF ± 10% 250 V	C105	4200092	47 µF 16 V
C10	4201060	100 µF 40 V	C106	4000057	47 pF ± 5% 63 V
C11	4011022	4.7 nF ÷20 +100% 40 V	C107	4011022	4.7 nF ÷20 +100% 40 V
C12	4200092	47 µF 16 V	C108	4130079	22 nF ± 20% 250 V
C13	4130136	1 µF ± 20% 100 V	C110	4130104	0.22 µF ± 20% 100 V
C14	4130136	1 µF ± 20% 100 V	C111	4130104	0.22 µF ± 20% 100 V

L1	8022080	2.5 mH	L100	6850114	0.5 µH

Tape amplifier, 8004172, PC7

R1	5010075	33 kohms ± 5% 1/8 W	R106	5010076	3.3 kohms ± 5% 1/8 W
R2	5010075	33 kohms ± 5% 1/8 W	R107	5010120	220 kohms ± 5% 1/8 W
R3	5010048	4.7 kohms ± 5% 1/8 W	R108	5010040	1 kohms ± 5% 1/8 W
R4	5001004	22 ohms ± 10% 1/2 W	R109	5010065	100 ohms ± 5% 1/8 W
R5	5010059	10 kohms ± 5% 1/8 W	R110	5010120	220 kohms ± 5% 1/8 W
R6	5010075	33 kohms ± 5% 1/8 W	R111	5010061	56 kohms ± 5% 1/8 W
R7	5010079	22 kohms ± 5% 1/8 W	R112	5010048	4.7 kohms ± 5% 1/8 W
R8	5010079	22 kohms ± 5% 1/8 W	R113	5010041	5.6 kohms ± 5% 1/8 W
R10	5020121	15 ohms ± 5% 1/8 W	R114	5001038	4.7 kohms ± 10% 1/2 W
R11	5001021	330 ohms ± 10% 1/2 W	R115	5010064	2,2 kohms ± 5% 1/8 W
R12	5010059	10 kohms ± 5% 1/8 W	R116	5010072	180 kohms ± 5% 1/8 W
R13	5010040	1 kohms ± 5% 1/8 W	R117	5010092	220 ohms ± 5% 1/8 W
R14	5010059	10 kohms ± 5% 1/8 W	R118	5010065	100 ohms ± 5% 1/8 W
R15	5010040	1 kohms ± 5% 1/8 W	R119	5010068	820 ohms ± 5% 1/8 W
R16	5010079	22 kohms ± 5% 1/8 W	R120	5010075	33 kohms ± 5% 1/8 W
R17	5001026	680 ohms ± 10% 1/2 W	R121	5010448	22 ohms ± 5% 1/8 W
R18	5001026	680 ± 10% 1/2 W	R122	5010247	1,5 kohms ± 5% 1/8 W
R20	5370128	100 kohms 0.1 W Lin.	R123	5010056	82 ohms ± 5% 1/8 W
R21	5011083	10 Mohms ± 5% 1/4 W	R124	5370059	250 ohms 0.1 W Lin.
R22	5011068	820 kohms ± 5% 1/4 W	R125	5010061	56 kohms ± 5% 1/8 W
R23	5010153	1.2 kohms ± 5% 1/8 W	R126	5010049	100 kohms ± 5% 1/8 W
R24	5010128	120 ohms ± 5% 1/8 W	R127	5010076	3.3 kohms ± 5% 1/8 W
R25	5010049	100 kohms ± 5% 1/8 W	R128	5010154	8.2 kohms ± 5% 1/8 W
R27	5010054	1 Mohms ± 5% 1/8 W	R129	5010060	39 kohms ± 5% 1/8 W
R100	5010065	100 ohms ± 1/8 W	R130	5010120	220 kohms ± 5% 1/8 W
R101	5010362	180 ohms ± 5% 1/8 W	R131	5001024	470 ohms ± 10% 1/2 W
R102	5010092	220 ohms ± 5% 1/8 W	R132	5370153	25 kohms 0,1 W Lin.
R103	5370150	500 ohms 0.1 W Lin.	R133	5010049	100 kohms ± 5% 1/8 W
R104	5010045	47 kohms ± 5% 1/8 W	R134	5370152	10 kohms 0,1 W Lin.
R105	5010048	4.7 kohms ± 5% 1/8 W			

C1	4130098	100 nF ± 20% 400 V	C104	4200098	100 µF 6 V
C2	4000069	100 pF ± 5% 63 V	C105	4130097	15 nF ± 10% 250 V
C4	4201069	2,2 µF 35 V	C106	4201074	47 µF 40 V
C5	4201058	0,47 µF 35 V	C107	4201065	10 µF 63 V
C6	4130103	100 nF ± 20% 250 V	C108	4200100	22 µF 40 V
C7	4201065	10 µF 63 V	C109	4201061	4,7 µF 63 V
C8	4201058	0,47 µF 35 V	C110	4010021	220 pF ± 10% 100 V
C9	4100049	5,6 nF ± 1% 63 V	C111	4010027	1 nF ± 10% 100 V
C12	4130103	100 nF ± 2% 250 V	C112	4010021	220 pF ± 10% 100 V
C13	4201061	4,7 µF 63 V	C113	4200098	100 µF 6 V
C14	4201058	0,47 µF 35 V	C114	4010063	4,7 nF ± 10% 63 V
C100	4201061	4,7 µF 63 V	C115	4201065	10 µF 63 V
C101	4010027	1 nF ± 10% 100 V	C116	4200325	1 µF 35 V
C102	4130089	22 nF ±10% 250 V	C117	4130088	33 nF ± 10% 250 V
C103	4000057	47 pF ± 5% 63 V	C118	4010021	220 pF ± 10% 100 V

L1	8020267	100 kHz osc.
L100	8022090	
L101	8022043	
	7400166	Record switch
	7400165	Push button switch
	7220116	Plug 8/7 pin
	7220117	Plug 12/11 pin

For Service Manuals Contact
MAURITRON TECHNICAL SERVICES
8 Cherry Tree Rd, Chinnor
Oxon OX9 4QY
Tel:- 01844-351894 Fax:- 01844-352554
Email:- enquiries@mauritron.co.uk

ABOSENER V/HENRIKSENS ELEKTRONIK

Mic. and Dolby 8004173 PC8

R1	5010059	10 kohms ± 5% 1/8 W	R17	5001026	680 ohms ± 10% 1/2 W
R2	5010065	100 ohms ± 5% 1/8 W	R26	5100255	270 ohms ± 10% 5 W
R3	5010120	220 kohms ± 5% 1/8 W	R28	5010135	18 kohms ± 5% 1/8 W
R4	5010092	220 ohms ± 5% 1/8 W	R29	5010079	22 kohms ± 5% 1/8 W
R5	5010040	1 kohms ± 5% 1/8 W	R101	5010362	180 ohms ± 5% 1/8 W
R6	5010075	33 kohms ± 5% 1/8 W	R102	5010265	3.3 kohms ± 2% 1/4 W
R7	5010046	12 kohms ± 5% 1/8 W	R103	5010045	47 kohms ± 5% 1/8 W
R8	5010048	4.7 kohms ± 5% 1/8 W	R104	5010049	100 kohms ± 5% 1/8 W
R9	5010044	330 ohms ± 5% 1/8 W	R105	5010063	150 kohms ± 5% 1/8 W
R10	5010049	100 kohms ± 5% 1/8 W	R106	5010083	270 kohms ± 5% 1/8 W
R11	5001038	4,7 kohms ± 10% 1/2 W	R107	5010362	180 ohms ± 5% 1/8 W
R14	5001028	1 kohms ± 5% 1/2 W	R108	5010074	680 kohms ± 5% 1/8 W
R15	5001028	1 kohms ± 5% 1/2 W	R109	5010077	470 kohms ± 5% 1/8 W
R16	5001026	680 ohms ± 10% 1/2 W			

C1	4201040	4,7 µF 63 V	C103	4100031	4.7 nF ± 1% 63 V
C2	4010027	1 nF ± 10% 100 V	C104	4100048	27 nF ± 1% 63 V
C3	4000069	100 pF ± 5% 63 V	C105	4100029	2.2 nF ± 5% 63 V
C4	4200298	1 µF 63 V	C106	4100033	3.3 nF ± 5% 63 V
C5	4201074	47 µF 40 V	C107	4100033	3.3 nF ± 5% 63 V
C6	4201061	4,7 µF 63 V	C108	4130102	330 nF ± 20% 250 V
C7	4000057	47 pF ± 5% 63 V	C109	4201065	10 µF 63 V
C8	4200097	220 µF 16 V	C110	4130087	47 nF ± 10% 250 V
C9	4200097	220 µF 16 V	C111	4200092	47 µF 16 V
C12	4130103	100 nF ± 20% 250 V	C112	4010021	220 pF ± 10% 100 V
C100	4201061	4.7 µF 63 V	C113	4130102	330 nF ± 20% 250 V
C101	4100049	5,6 nF ± 1% 63 V	C114	4130103	100 nF ± 20% 250 V
C102	4201065	10 µF 63 V			

L100	8022067	22 mH	RL1	7600035	24 V
L101	8022068	36 mH		7210159	Mic. socket
				7220139	Plug 11/10 pin

Indicator 8004174 PC9

R1	5001026	680 ohms
R100/200	5310079	2 x 22 kohms

6275369	Wire bundle with plug
3322045	Glass for LED

ABO-CENTER V/HENRIKSENS ELEKTRONIK

For Service Manuals Contact
MAURITRON TECHNICAL SERVICES
8 Cherry Tree Rd, Chinnor
Oxon OX9 4QY
Tel:- 01844-351694 Fax:- 01844-352554
Email:- enquiries@mauritron.co.uk

For Service Manuals Contact
MAURITRON TECHNICAL SERVICES
8 Cherry Tree Rd, Chinnor
Oxon OX9 4QY
~~Tel:- 01844 351694 Fax:- 01844 352554~~
Email:- enquiries@mauritron.co.uk

MECHANICAL PARTS LIST

1	3412631	Cabinet, complete, teak
	3412633	Cabinet complete, rosewood
	3412634	Cabinet, complete, oak
2	2380003	Square nut, M3
3	0335149	Spring
4	2072706	Threaded pin M3 × 10DIN438
5	8002319	PC unit
6	8002318	PC4
	2548134	Bracket
7	2548146	Bracket
8	2038206	Screw AM3 × 4 DIN84
9	2038247	Screw AM3 × 6 DIN84
10	3151155	Bracket
11	2775593	Button, SPKR 1
	2775594	Button, SPKR 2
	2775595	Button, ST-AFC
	2775596	Button, MONO
	2775597	Button, TAPE
	2775598	Button, PHONO
	2775599	Button, LW
	2775600	Button, MW
	2775601	Button, FM
	2775602	Button, P1
	2775603	Button, P2
	2775604	Button, P3
	2775605	Button, P4
	2775606	Button, OFF
12	3302274	Screen, volume
13	3190066	Pointer glass
14	3302109	Screen
15	3191115	Dial with sliders
16	3015079	Slide
17	2568523	Front profile with sliders
18	3152241	Screen, bass
19	3152243	Screen, treble
20	3152242	Screen, balance
21	2724050	Wheel
22	2568483	Bracket
24	3152063	Holder
25	2038007	Screw AM3 × 6 DIN963
26	3152234	Screen, level
27	3015032	Slide
28	3190076	Pointer glass
29	3015084	Slide
30	3152093	Screen
31	2640034	Clamp
32	2042240	Screw AM4 × 10 DIN84
33	2542470	Bracket
34	2013024	Screw 2.9 × 6.5 DIN7981
35	2038247	Screw AM3 × 6 DIN84
36	2622052	Fibre washer
37	8002336	PC2
	2548143	Bracket, left
	2548134	Bracket, right
	2622245	Mica sheet TO-126
	2624031	Spring washer TO-126
38	3412911	Cabinet, side plate, teak, left
	3412913	Cabinet, side plate, rosewood, left
	3412914	Cabinet, side plate, oak, left
39	2070702	Threaded pin M3 × 5 DIN553
40	2542450	Bracket
41	2622041	Washer
42	2013062	Screw 2.84 × 6.35 mm
43	3151155	Bracket
44	2013062	Screw 2.84 × 6.35 mm
45	3302110	Screen, tuning
46	2794023	Wheel
47	3322050	Window
48	7212021	Jack socket
49	2548141	Bracket
51	2038007	Screw AM3 × 6 DIN963
52	3470083	Side plate
53	2038247	Screw AM3 × 6 DIN84
54	2038247	Screw AM3 × 6 DIN84
55	2380092	Nut
56	3191113	Profile
57	2038247	Screw AM3 × 6 DIN84
58	2038216	Screw AM3 × 10 DIN84
59	8002286	PC3
60	8004174	PC9
61	2039006	Screw
62	2380011	Hexagon nut M3
63	2542467	Bracket
64	2548147	Bracket
65	2038007	Screw AM3 × 6 DIN963
66	2038201	Screw AM3 × 3 DIN84
67	2938081	Rubber bushing
68	2622024	Washer
69	0585027	Plastic foot
70	2015009	Screw 3.5 × 13 mm
71	2622015	Washer
72	2038216	Screw AM 3 × 10 DIN84
73	2816150	Bronze spring
74	3030037	Hinge
75	3162120	Cover, mic.
76	2038007	Screw AM3 × 6 DIN963
77	2043012	Screw AM 3 × 8 DIN965
78	2038206	Screw AM 3 × 4 DIN84
79	2013201	Screw 2.9 × 6.5 mm DIN7981
80	2622052	Fibre washer
81	8002301	PC6
	2548111	Bracket
	2622248	Mica sheet TO-220
	2624032	Spring washer TO-220
	2938140	Bushing TO-220
82	2514022	Clamp
83	2039010	Screw AM3×6DIN7985, black
84	2038220	Screw AM3 × 10 DIN84
85	2622024	Washer
86	2938081	Rubber bushing
87	2034231	Screw AM2 × 4 DIN84
88	2038007	Screw AM3 × 6 DIN963
89	2542465	Bracket
91	2810094	Spring
92	8013193	Mains transformer
93	2039010	Screw AM3×6DIN7985, black
94	2622052	Fibre washer
95	3358119	Heat sink
97	2542447	Bracket
98	7500033	Fuse holder
99	3120194	Holder
100	7401001	Mains-voltage switch
101	7211047	Socket, 2-contact
102	0534104	Screen
103	2013017	Screw 2.9×13DIN7981, black
104	2038201	Screw AM3 × 3 DIN84
105	2548158	Bracket
106	2038247	Screw AM3 × 6 DIN84
107	2643014	Clamp
108	3454247	Bottom
109	2038007	Screw AM3 × 6 DIN963
110	2542449	Bracket
111	2622041	Washer
112	2013024	Screw 2.9 × 6.5 DIN7981
113	2036203	Screw AM2.6 × 4 DIND84
114	2775607	Button, ON-OFF
	2775608	Button, Dolby-NR
	2775609	Button, CrO_2
115	2812043	Spring
116	2395031	Spire
117	8050071	Tuner
118	6270198	Socket, complete
119	7211049	Socket, 5-contact
120	7211050	Socket, 75 ohms
121	2641062	Locking plate
122	2641061	Bushing
123	8052107	Chassis
124	2038007	Screw AM3 × 6 DIN963
125	2038247	Screw AM3 × 6 DIN84
126	3470084	Side plate
127	3454233	Bottom
128	2622015	Washer
129	2930075	Bushing
130	2038247	Screw AM3 × 6 DIN84
131	2042239	Screw AM4 × 25 DIN84
132	2622015	Washer
133	2038247	Screw AM3 × 6 DIN84
134	2034236	Screw AM2 × 3 DIN84
135	2624044	Washer
136	7510029	Switch
137	2038247	Screw AM3 × 6 DIN84
138	2542466	Bracket
139	2810094	Spring
140	2775665	Button, memory
141	6275371	Wire bundle with socket
142	2834062	Shaft
144	3151157	Holder
145	2038066	Screw
146	2542468	Bracket
147	2038247	Screw AM3 × 6 DIN84
148	2038235	Screw AM3 × 25 DIN84
149	3152100	Holder
150	2039901	Screw AM3×8DIN7985. black
151	2542469	Bracket
152	2622041	Washer
153	2013062	Screw 2.84 × 6.35 mm
155	2013247	Screw AM3 × 6 DIN84
156	2724033	Wheel
157	4310011	Variable capacitor
158	7211042	Socket FM
	7211043	Socket AM
159	2576050	Spacer
160	2038247	Screw AM3 × 6 DIN84
161	3164333	Cover
162	2034042	Screw
163	2013024	Screw 2.9 × 6.5DIN7981
164	8004175	PC5
165	2038076	Screw
167	8004173	PC8
168	8004172	PC7
169	2038247	Screw AM 3 × 6 DIN84
170	2622015	Washer
171	3452326	Back plate
172	3112221	Chassis
173	2070702	Threaded Pin M3 × 5 DIN553
174	3412921	Cabinet, side plate, right, teak
	3412923	Cabinet, side plate, right, rosewood
	3412924	Cabinet, side plate, right, oak
175	2038206	Screw AM3 × 4 DIN84
176	2038206	Screw AM3 × 4 DIN84
177	2542495	Bracket
178	3322052	Counter knob
179	2812081	Spring
180	2038075	Screw AM3 × 10 DIN84, nylon
181	3015032	Slide
182	3152092	Screen
183	3015033	Slide

ABO-CENTER A/S HENRIKSENS ELEKTRONIK

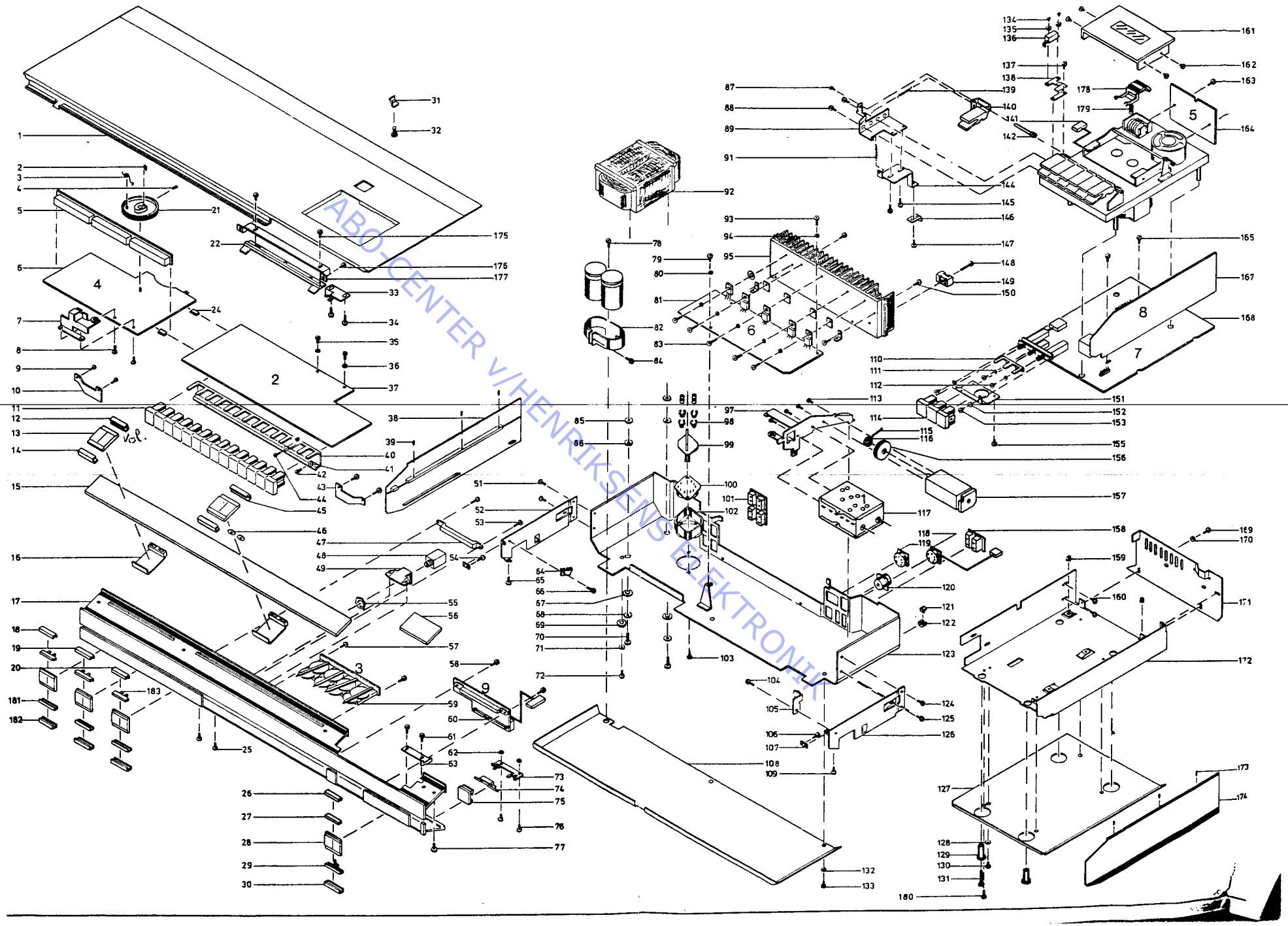

ABO-CENTER v/HENRIKSENS ELEKTRONIK

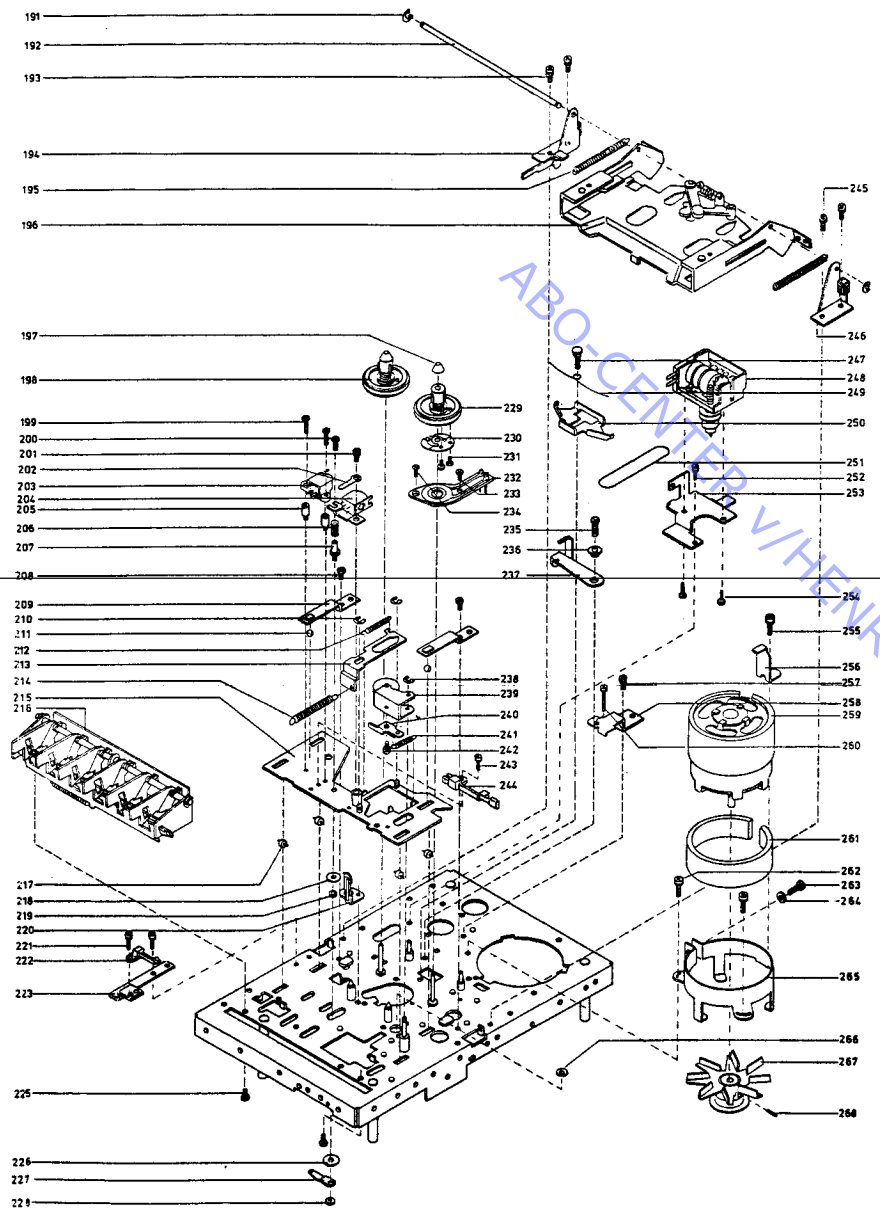

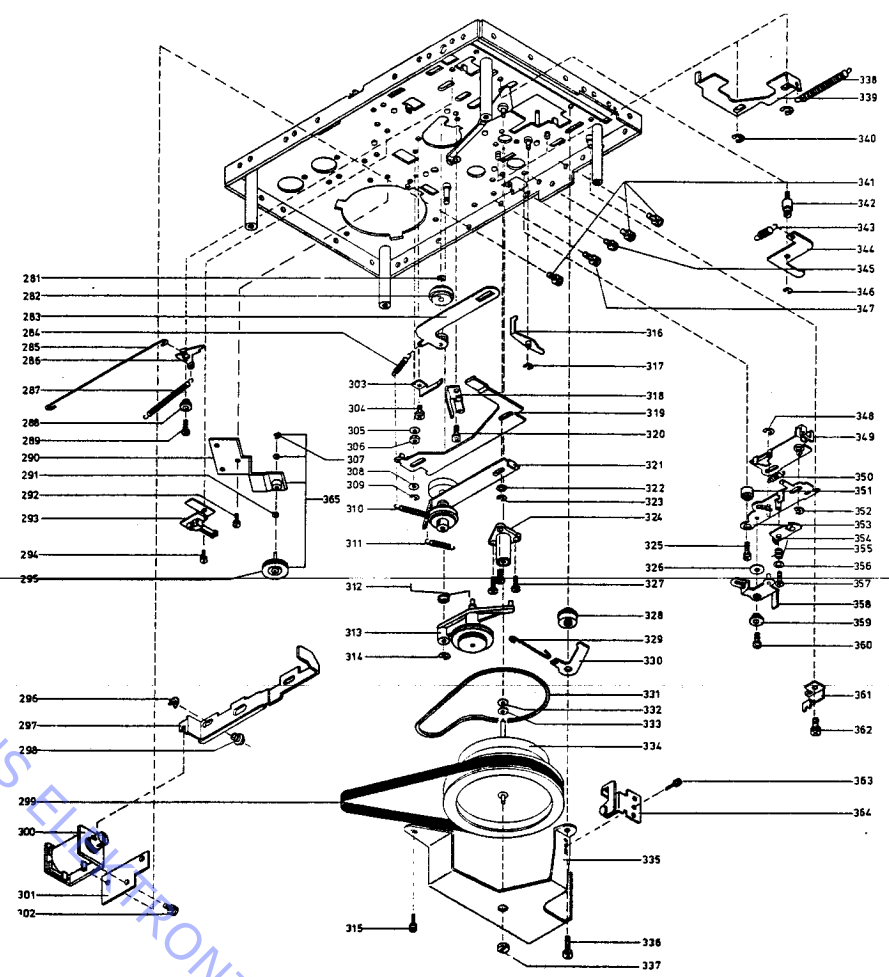

ABO-CENTER V/HENRIKSENS ELEKTRONIK

For Service Manuals Contact
MAURITRON TECHNICAL SERVICES
8 Cherry Tree Rd, Chinnor
Oxon OX9 4QY
Tel:- 01844-351694 Fax:- 01844-352554
Email:- enquiries@mauritron.co.uk

191	2390073	E-ring
192	2831018	Shaft
193	2036008	Screw AM2.6 × 5 with washer
194	2542482	Bracket
	3010009	Stop (rubber)
195	2818025	Spring
196	3151159	Cassette holder complete
	2818053	Spring for eject
	2854063	Arm right (eject)
	2854064	Arm left (eject)
	2390073	E-ring 2.5ø
	2992075	Brass tap
197	3164143	Cover
198	2726120	Turntable
199	2024239	Screw AM2 × 12
200	2034207	Screw AM2 × 5
201	2034036	Screw AM2 × 4 with washer
202	7530076	Solder tag
203	860039	Erase head
204	8600038	Tapehead
205	2576052	Spacer
206	2818024	Spring
207	2576053	Spacer
208	2036012	Screw AM2.6 × 3
209	2542363	Bracket
210	2390073	E-ring 2.5ø
211	2917012	Ball ø3
212	2818042	Spring
213	2542426	Bracket
214	2818048	Spring
215	3112226	Tapehead chassis
216	7410017	Pushbutton unit with buttons
	2775666	Pushbutton <<
	2775667	Pushbutton >>
	2775668	Pushbutton >
	2775669	Pushbutton eject/stop
	2775670	Pushbutton record
	2775671	Pushbutton pause
	3980941	Glue for buttons
217	2794037	Roller
218	2622196	Washer
219	2389034	Special nut
220	2850086	Arm
221	2036008	Screw AM2.6×5withwasher
222	7400138	Switch
223	2542485	Bracket
225	2036008	Screw AM2.6×5withwasher
226	2622256	Washer
227	2854029	Arm
228	2380113	Nut
229	2726120	Turntable
230	2819127	Contact spring
231	2033008	Screw AM 1.7 × 3
232	6140533	Print contact
233	2034033	Screw AM 2 × 3
234	2034033	Screw AM 2 × 3
235	2036203	Screw AM 2.6 × 4
236	2932055	Bushing
237	2548130	Bracket
238	2390073	E-ring 2.5ø
239	2804036	Thrust roller
240	2530332	Bracket
241	2818043	Spring
242	2034236	Screw AM2 × 3
243	2036009	Screw 2.6 × 6 with washer
244	7510027	Pause contact
245	2036008	Screw AM2.5× 5with washer
246	2542483	Bracket
	3010009	Stop (rubber)
247	2831029	Shaft
248	3370126	Counter
249	2819124	Spring
250	2542432	Bracket
251	2732046	Belt
252	2036008	Screw AM2.6×5 with washer
253	2542500	Bracket
254	2038952	Screw AM3 × 4
255	2038063	Screw 3 × 5 with washer
256	2542486	Bracket
257	2036008	Screw AM2.6×5 with washer
258	2542484	Bracket
259	8400047	Motor
260	2036014	Screw AM2.6 × 15
261	3170117	Insulation for motor
262	2038063	Screw AM3 × 5 with washer
263	2039908	Screw AM3 × 10
264	2622013	Washer ø3
265	3151160	Holder for motor
266	2624040	Washer
267	~~2070702~~	Fan blade 3410007
268	2070702	Threaded pin

Piezek Cover 3302290

281	2390056	E-ring 1.5ø
282	2804029	Idler wheel
283	2853049	Arm for idler wheel
284	2818045	Spring
285	2850056	Arm
286	2542356	Bracket
287	2818052	Spring
288	2932055	Bushing
289	2036008	Screw AM2.6 × 5 with washer
290	2542501	Bracket
291	2624039	Washer
292	2038063	Screw AM3 × 5 with washer
293	7510026	Bracket with switch
294	2036009	Screw AM2.6 × 6 with washer
295	2724057	Pulley
296	2390072	E-ring 3ø
297	2542431	Bracket
298	2932077	Bushing
299	2732042	Drive belt
300	6840217	Magnet Coil
	2818050	Spring
301	3151148	Holder for magnet coil
302	2038069	Screw AM3 × 4 with washer
303	2816097	Guide plate, spring
304	2036012	Screw AM2.6 × 3
305	2624036	Spring washer M2.6
306	2380113	Nut M2.6
307	2390056	Locking plate
308	2624041	Washer, plastic
309	2390056	E-ring 1.5ø
310	2818028	Spring
311	2818044	Spring
312	2819142	Spring
313	2854050	Clutch, complete
314	2390073	E-ring 2.5ø
315	2038063	Screw AM3 × 5 with washer
316	2854048	Pause arm
317	2390056	E-ring 1.5ø
318	3015038	Guide plate
319	2854026	Arm
320	2036008	Screw AM2.6 × 5 with washer
321	2853048	Arm complete
322	2641041	Washer, complete
323	2390056	E-ring
324	2905069	Capstan shaft
325	2036010	Screw AM2.6 × 8 with washer
326	2622257	Washer ø4
327	2036903	Screw AM2.6 × 5
328	2932078	Bushing
329	2850085	Arm
330	2530333	Bracket
331	2732044	Belt
332	2622253	Washer
333	2622253	Washer
334	2794073	Flywheel
335	2548149	Bracket for flywheel
336	2036007	Screw AM2.6 × 4 with washer
337	2905072	Bottom bearing
338	2818047	Spring
339	2854028	Arm
340	2390072	E-ring 3ø
341	2038063	Screw AM3 × 5 with washer
342	2834058	Shaft for arm
343	2818046	Spring
344	2851066	Arm
345	2036009	Screw AM2.6 × 6 with washer
346	2390073	E-ring 2.5ø
347	2038063	Screw AM3 × 5 with washer
348	2390073	E-ring 2.5ø
349	2853051	Arm
350	2818049	Spring
351	2932079	Bushing
352	2390073	E-ring 2.5ø
353	2542428	Bracket
354	2854051	Pause arm
355	2819126	Spring
356	2622254	Washer M2
357	2034036	Screw AM2 × 6 with washer
358	2854049	Arm
359	2932080	Bushing
360	2034037	Screw AM2 × 6 with washer
361	2542480	Bracket
362	2036007	Screw AM2.6 × 4 with washer
363	2038063	SCrew AM3 × 5 with washer
364	2542479	Bracket
365	2542502	Bracket with pulley

ABO-CENTER V/HENRIKSENS ELEKTRONIK

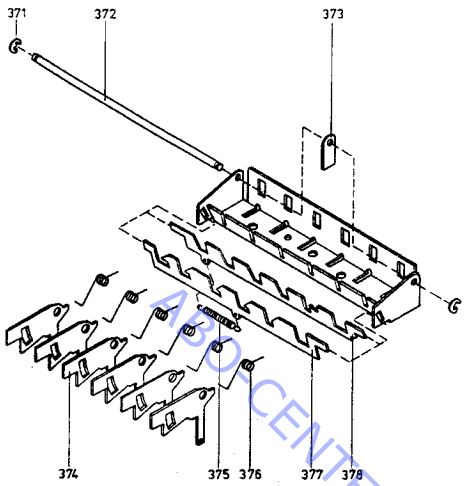

371	2390002	E-ring 3.2ø
372	2831030	Shaft
373	3151150	Holder
374	2853054	Arm
375	2819129	Spring
376	2819130	Spring
377	2853052	Slide arm
378	2853053	Slide arm

PARTS NOT SHOWN

3532134	Diagram
3391520	Outer carton
3397303	Foam packing, front
3397304	Foam packing, rear
6271101	Mains lead with Euro-plug
6780041	Test tape kit
6270202	Wire kit for repair (recorder)
6275370	Wire bundle, radio to recorder
7210130	Socket/housing 12/11-contact
6275368	Wire bundle, recorder
7210129	Socket/housing 8/7-contact
7500114	Contact pin
8410008	60 Hz kit

To convert from 60 cycle to 50 cycle

Id 4130099

Id 841007

For Service Manuals Contact
MAURITRON TECHNICAL SERVICES
8 Cherry Tree Rd. Chinnor
Oxon OX9 4QY
Tel:- 01844-351694 Fax:- 01844-352554
Email:- enquiries@mauritron.co.uk

ABO-CENTER V/HENRIKSENS ELEKTRONIK

MECHANICAL FUNCTION AND ADJUSTMENT

The sketches below show the mechanical functions of the tape mechanism. Only activate mechanical parts are accentuated.

Play

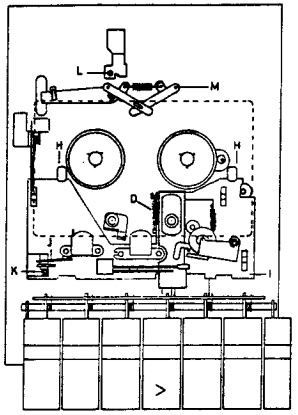

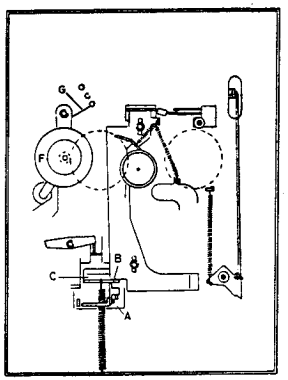

When the Play button is in its depressed and locked position there should be contact between A, B and C; and spring D should be tight. Also, plate I should go all the way forwards against stop blocks H.
When the right-hand reel is stopped, clutch F should slide in the friktion between felt and Delrin (Delrin is a Plastic). If it does not, tighten spring G or replace clutch F.
The switch J must be OFF, but take care that the swithc J is ON in position stop and fast tape motion. This may be adjusted by the screw K.
The screw L is adjusted until the release lever M is easily released by depressing the cassette holder, with a cassette in it.

Record

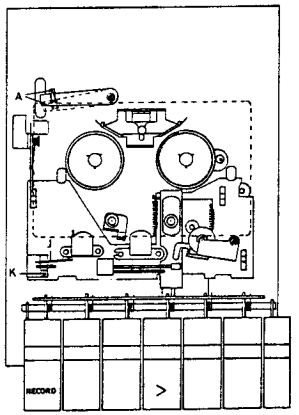

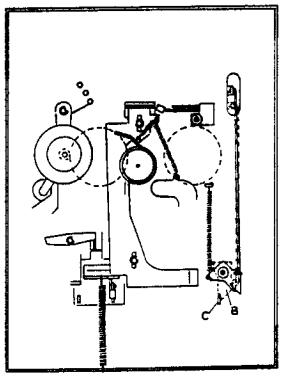

Arm A should be adjusted (bent) so that angle B provides positive locking of arm C (Recod button) when a cassette is inserted with the record lock window open and so that arm B is positively disengaged from arm C when the cassette record lock window is closed.

Pause

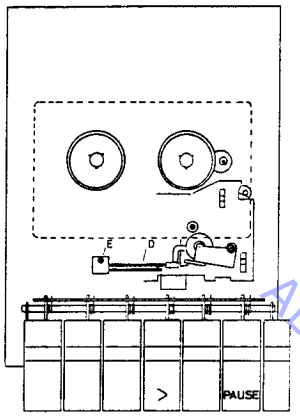

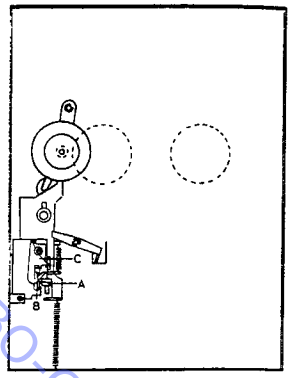

Tag A should be bent so that the thrust roller is pulled positively clear of the capstan shaft and so that pin B is positively gripped by locking mechanism C when the pause button is depressed.
Switch D should be ON. This can be adjusted by lossening screw E and turning switch D.

Fast forward

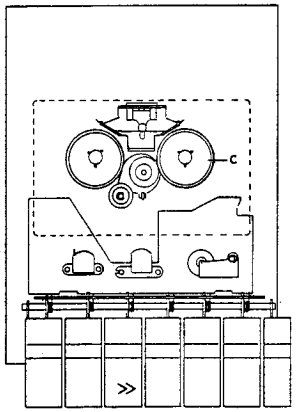

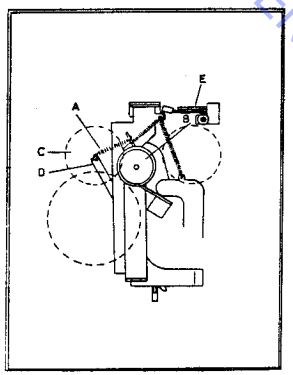

Spring A should be only just tight enough so that the transmission slips in the cluth below idler wheel B when reel C is held fast. Adjustment is carried out by bending D. (Spring A must not be tight during Rewind). It may be necessary to replace or adjust idler wheel and clutch B.
Switch E should be ON.

For Service Manuals Contact
MAURITRON TECHNICAL SERVICES
8 Cherry Tree Rd. Chinnor
Oxon OX9 4QY
Tel:- 01844-351694 Fax:- 01844-352554
Email:- enquiries@mauritron.co.uk

ABO-CENTER V/HENRIKSENS ELEKTRONIK

Rewind

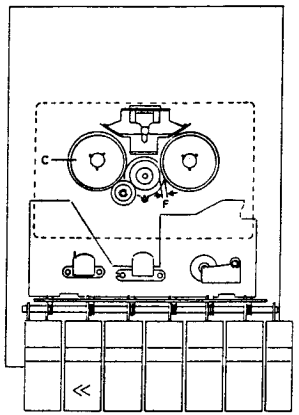

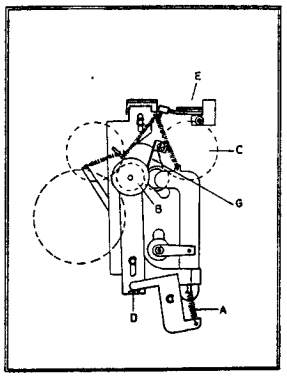

With the unit set at Stop, adjust leaf spring G so that spacing F ≦ 0.4 mm.
Spring A should be only just tight enough so that the transmission slips in the clutch below idler wheel B when reel C is held fast. It may be necessary to adjust or replace clutch B. Switch E should be ON.

Stop/automatic stop

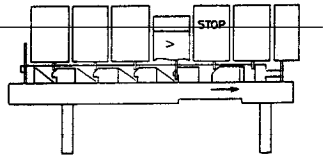

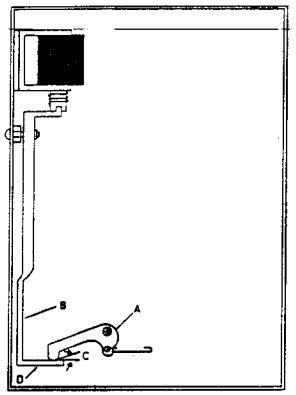

The arm B should be bent at point D so that spacing C between A and B is zero with the unit in the Stop and Play positions.

Eject

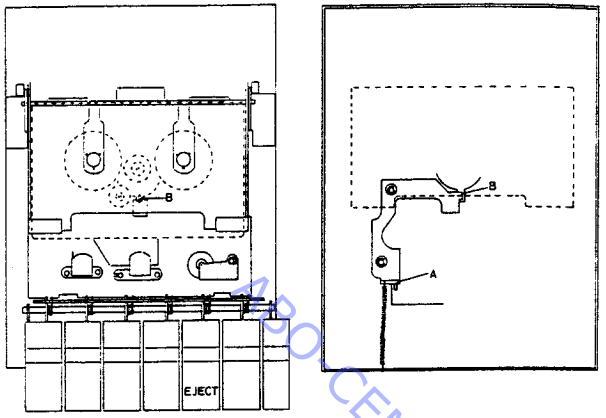

Eject should be adjusted so that notch B locks the cassette holder when the latter is pressed down and so that it releases positively when the Eject button is depressed (with all other buttons released).
Adjustment is performed by bending the angle A.

Brakes

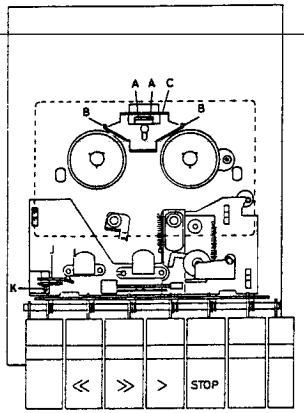

Brakes B should disengage positively and simultaneously from the reels when one of the fast tape movements or Play are operated. The brakes are adjusted by bending tags A. In addition, adjustment should be so that clearance exists between A and brake disc C with the unit set at Stop.

Lubrication

The need for lubrication is negligible, but the directions given below should be followed during overhauls and when replacing major mechanical components.

Capstan shaft bearing (top) 2 × Sliding surface against pulley	3984211 Oilit, Castrol (small amount)
Idler wheel 282: Face sliding against shaft 283 Angle 354: Face sliding against arm 349, arm 354 and arm 358 Angle 283: Face sliding against arm 277 Angle 339: Face sliding against chassis and washers on two guide pins Shafts for turntables	3984216 Molykote (pasta G, small amount)
Ball 211: Surface of contact with 209 and 215 Tape head bridge 215: Surface of contact with 217 (4 rollers) Roller 217: Surface of contact between chassis and 215 Arm 213: Face sliding against chassis 215	3984217 Gear grease Bosch (small amount)
Capstan bearing (bottom)	Keep clean

For Service Manuals Contact
MAURITRON TECHNICAL SERVICES
8 Cherry Tree Rd, Chinnor
Oxon OX9 4QY
Tel:- 01844-351694 Fax: 01844-352554
Email:- enquiries@mauritron.co.uk

ARO-CENTER V/HENRIKSENS ELEKTRONIK

ELECTRICAL ADJUSTMENTS TAPE RECORDER

Non-bracketed references apply to left channel; bracketed ones apply to right channel.

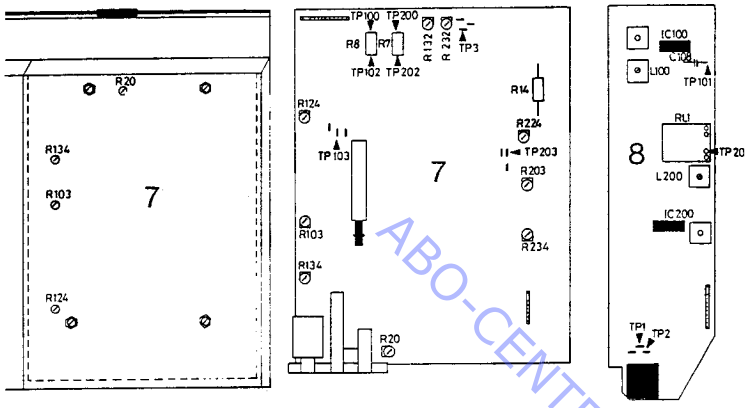

Azimuth

Demagnetise sound head and erase head.
Connect AF vacuum-tube voltmeter at 7TP100 (7TP200).
Insert azimuth tape 6780036.
Adjust screw A for max. response in both channels and identical output for left and right channels (mean value).
Lock screw A with glue.

19 kHz Filter

Connect tone generator at 8TP101 (8TP201). Set generator to deliver 19 kHz 100 mv.
7R134(7R234) to mid-scale.
Connect AF vacuum-tube voltmeter at 7TP102(7TP202).
Adjust 8L100(8L200) for min. AF vacuum-tube voltmeter reading.

Playback level

Insert Pegel tape (333 Hz), 6780035.
Adjust 7R134 for 720 mV as measured with AF vacuum-tube voltmetr at 7TP100.
Adjust 7R234 for 720 mV as measured at 7TP200.

Playback frequency response

Activate CrO_2.
Insert playback frequency tape 6780056 (time constants 70 µsec. and 3180 µsec.).
Adjust 7R103 so that 12.5 kHz level is max. 1.5 dB below 250 Hz level as measured with AF vacuum-tube voltmeter at 9TP100.
(7R203 at 7TP200).

Indicator and Record Amplifier

Stop erase generator (short-circuit 7C6).
Set tone generator to deliver 333 Hz 100 mV as measure with AF vacuum-tube voltmeter at 8TP1.
Connect AF vacuum-tube voltmeter at 7TP103.
Set record potentiometer so that 3 V is measured at 7TP103.
Adjust 7R20 so that first red LED lights.
Back off tone generator 20 dB.
Read and note voltage at 7TP103.
Set tone generator to deliver 12.5 kHz.
Adjust 7R124 so that 12.5 kHz level at 7TP103 is 14 dB higher than 333 Hz level.
Set tone generator to deliver 333 Hz 100 mV as measured with AF vacuum-tube voltmeter at (8TP2).
Connect AF vacuum-tube voltmeter at (7TP203).
Set record potentiometer so that 3 V is measured at (7TP203).
Back off tone generator 20 dB.
Read and note voltage at (7TP203).

Set tone generator to deliver 12.5 kHz.
Adjust (7R224) so that 12.5 kHz level at (7TP203) is 14 dB higher than 333 Hz level.
Remove short-circuit from across 7C6.

Bias

Set tone generator to deliver 333 Hz 100 Hz 100 mV as measured with AF vacuum-tube voltmeter at 8TP(8TP2).
Connect AF vacuum-tube voltmeter at 7TP100 (7TP200).
Insert standard tape 6780040.
Adjust record potentiometer so that first red LED only just lights.
Back off tone generator 20 dB.
Record and play back 333 Hz and 12.5 kHz. Adjust 7R132(7R232) so that 12.5 kHz level is 1 dB below 333 Hz level.

For Service Manuals Contact
MAURITRON TECHNICAL SERVICES
8 Cherry Tree Rd, Chinnor
Oxon OX9 4QY
Tel: 01844-351694 Fax: 01844-352554
Email:- enquiries@mauritron.co.uk

ABO-CENTER V/HENRIKSENS ELEKTRONIK

ADJUSTMENT RADIO PART

No-signal current

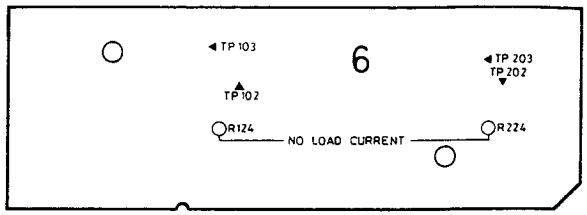

No-signal current is adjusted with the receiver cold and with the volume control turned fully down. *Speakers must not be connected.*
With 6R124 (6R224) adjust for 25 mA collector current in 6IC100 (6IC200) or 10 mV across 6R125 (6R225), 6TP102 and 6TP103 (6TP202 and 6TP203).
After power has been applied for 10 minutes with the volume control turned fully down, check the no-signal current and again adjust for 25 mA or 10 mV across the emitter resistor.

Tuning Voltage

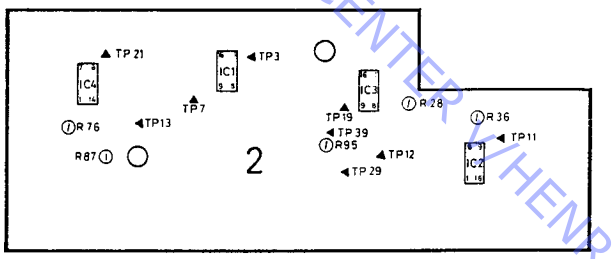

Depress the FM button and turn the FM dial pointer against the right-hand stop. Adjust 2R28 for 25.5 V at 2TP19. Turn FM dial pointer against the left-hand stop. Adjust 2R95 for 4.6 V at 2TP39.

Front end, tuner

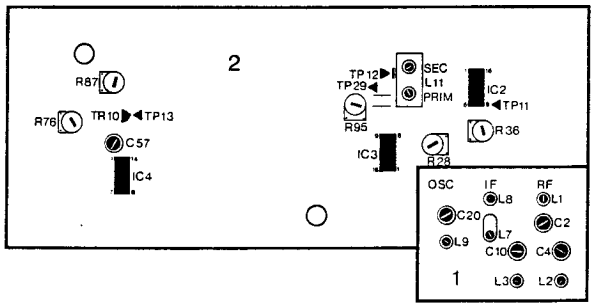

With the tuning control set the dial pointer to 89 MHz and the sweep generator to 89 MHz. With 1L9, 1L1, 1L2 and 1L3 adjust for max. response and symmetrical IF curve at pin 15 of 2IC2.
With the tuning control set the dial pointer to 106 MHz and the sweep generator to 106 MHz.
With 1C20, 1C2, 1C4 and 1C10 adjust for max. response and symmetric IF curve.
Check the dial calibration and repeat adjustment if necessary.
With the tuning control set the dial pointer to 97 MHz and the sweep generator to 97 MHz. With 1L7 and 1L8 adjust for max. response and symmetrical IF curve.

IF and detector

Tune in a weak sweep signal, AFC OFF.
Take off S-curve at pin 5 of 2IC2. With 2L11 prim. and sec.
Adjust for max. response and symmetrical S-curve.
While alternately switching the AFC on and off adjust 2L11 sec. until the AFC function does not affect the S-curve.

Tuning indicator

Tune the receiver correctly to an FM station (0 V between pin 5 and pin 6 of 2IC2 (2TP12 and 2TP29).
With 2R87 adjust for identical brightness of both lamps.

Level

Apply a 10µV signal to the aerial input.
Depress AFC/ST button.
Tune receiver accurately to the signal generator frequency, say 97 MHz.
Adjust 2R36 so that muting only just operates.

Decoder

For Service Manuals Contact
MAURITRON TECHNICAL SERVICES
8 Cherry Tree Rd, Chinnor
Oxon OX9 4QY
Tel: 01844-351694 Fax: 01844-352554
E-mail: enquiries@mauritron.co.uk

Shut off the stereo decoder input by shorting 2R58. With 2C57 adjust the internal oscillator accurately to 19 kHz as measured at 2TP21.
The accuracy can be checked in two ways:
1. By connecting a frequency counter to 2TP21.
2. By applying 19 kHz from 2TP21 to the oscilloscope y-input and 19 kHz from a stereo coder to the oscilloscope x-input. When the Lissajous figure is stationary, adjustment is correct.

A third way to adjust the internal oscillator is as follows:
3. Tune in a stereo signal. Turn 2C57 to one side until the stereo lamp goes out. Then turn 2C57 to the other side until the stereo lamp goes out. The setting midway between these two settings represents correct adjustment.

Channel separation

Connect stereo coder to aerial input, f.mod. 1 kHz, Δ f 40 kHz, pilot 8 - 10%, AFC on.
Connect wattmeter to amplifier output.
Set treble control at min. With 2R76 adjust for min. output in the unmodulated channel.
Make this adjustmentboth with unmodulated left channel and with unmodulated right channel.
Coils 2L12, 2L13, 2L14 and 2L15 are factory adjusted and should not be touched.

AM IF

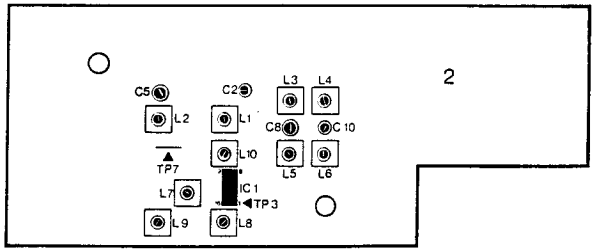

Set receiver to MW, aprox. 575 kHz.
Connect sweep generator to pin 1 of 2IC1 (2TP3).
Set sweep generator at 468 kHz, Δ f 10 kHz (IF can be 468 kHz ± 1.5 kHz due to ceramic filter tolerances).
Connect oscilloscope to 2TP7.
Turn dust cores of 468 kHz parallel trap 2L5 and series trap 2L6 all the way out.

HIFI-CENTER V/HENRIKSENS ELEKTRONIK

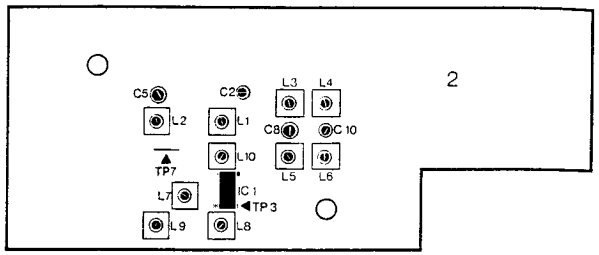

With 2L7, 2L8, 2L9 and 2L10 adjust for maximim IF curve (as shown in sketch).

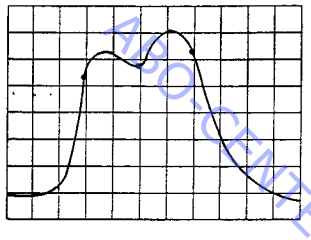

NOTE: Use weakest possible signal while aligning, so as avoid operating the AGC.

Parallel and series traps

Connect signal generator to aerial input through dummy aerial. Set generator to deliver 468 kHz, mod. 30%, 400 Hz.
Connect wattmeter to amplifier output. Set treble control at min.
Set signal generator frequency to centre of receiver IF passband.
With 2L5 and 2L6 adjust for min. wattmeter reading.

MW oscillator and signal frequency circuits

Connect signal generator to aerial input through dummy aerial. Set generator to deliver 575 kHz, mod. 30%, 400 Hz.
Connect wattmeter to aerial output.
Depress MW button. Set receiver to 575 kHz.
With 2L1 align oscillator so that receiver is centered on the transmitting frequency.
With 2L4 adjust for max. wattmeter reading.
Set signal generator and receiver at 1495 kHz.
With 2C2 align oscillator.
With 2C10 adjust signal-frequency circuit for max. response.
Repeat adjustment procedure until correct dial matching and max. signal-frequency circuit response are obtained.
End with 2C10.

LW oscillator and signal frequency circuits

Depress LW button. Set signal generator and receiver at 155 kHz.
With 2L2 align oscillator.
With 2L3 adjust signal-frequency circuit for max. response.
Set signal generator and receiver at 320 kHz.
With 2C5 align oscillator.
With 2C8 adjust signal-frequency circuit for max. response.
Repeat adjustment procedure until correct dial matching and max. signal frequency circuit response are obtained.
End with 2C8.
NOTE: Use a weak signal when adjusting the AM oscillators. Adjust, by listening, for max. noise suppression in the centre of the frequency.

TECHNICAL DATA, DIN 45500

For Service Manuals Contact
MAURITRON TECHNICAL SERVICES
8 Cherry Tree Rd, Chinnor
Oxon OX9 4QY
Tel:- 01844-351694 Fax:- 01844-352554
Email:- enquiries@mauritron.co.uk

ABO-CENTERV/HENRIKSENS ELEKTRONIK

Amplifier

Power output	2 x 25 W RMS/4 ohms
	2 x 20 W RMS/8 ohms
	2 x 40 W music/4 ohms
	2 x 25 W music/8 ohms
Speaker impedance	4 ohms
Harmonic distortion	< 0.1%
Intermodulation	< 0.15%
Frequency range ± 1,5 dB	20 - 30,000 Hz
Damping factor	> 35
PHONO, inputs	2.2 mV/47 kohms
Overload margin	80 mV
Signal-to-noise ratio	> 60 dB
TAPE, inputs	400 mV/100 kohms
Signal-to-noise ratio	> 60 dB
Channel separation 1000 Hz	> 56 dB
Channel separation 250 - 10,000 Hz	> 40 dB
TAPE, outputs (norm. input phono)	30 mV/100 kohms
Headphones	14 V/220 ohms
BASS control at 40 Hz	± 12 dB
TREBLE control at 12,500 Hz	± 12 dB
BALANCE control	± 60 dB

FM tuner

Aerial impedance	75/300 ohms
Range	87.5 - 108 MHz
Sensitivity, stereo, 46 dB	35 µV/75 ohms
Frequency range	20 - 15,000 Hz
Harmonic distortion	< 0,4%
Channel separation, 1000 Hz	> 35 dB
Channel separation, 250 - 10,000 Hz	> 30 dB
Pilot suppression, 19 kHz	> 65 dB
38 kHz	> 70 dB

AM tuner

LW	147 - 350 kHz
MW	520 - 1610 kHz
Sensitivity LW 200 kHz, 20 dB S/N IEC	90 µV
MW 1000 kHz, 20 dB S/N IEC	90 µV
Bandwidth 3 dB	6 kHz

Tape recorder

Compact cassette	C60 - C90
Tape head	Super permalloy
Wow & flutter	< ± 0.20%
Speed deviation	< ± 1%
Fast forward and rewind	85 sec.
Frequency range, chrom	30 - 14.000 Hz
Signal-to-noise ratio chrom	> 56 dB
Signal-to-noise ratio chrom with Dolby	> 63 dB
Erasure	> 70 dB
Microphone input	0.1 mV/10 kohms

Other data

Power supply	110 - 130 - 220 - 240 volt
Frequency	50 Hz
Power consumption	20 - 160 watts
Dimensions W x H x D	68 x 9 x 27 cm
Weight	11 kg

Subject to change without notice

ADSKILLELSE/
DISASSEMBLY

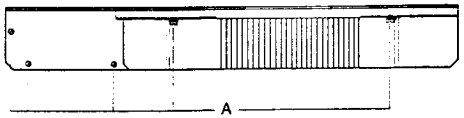

Skruerne mærket A fjernes og den lille bagplade samt toppladen kan aftages.

Remove screw A and the small back plate and the top plate may be dismantled.

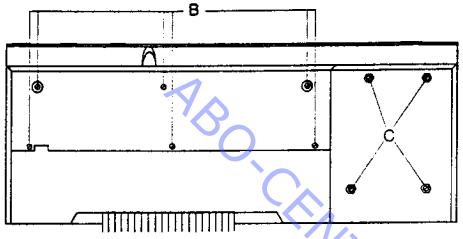

Skruerne mærket B fjernes og bundpladen under radiodel kan aftages.
Skruerne C og D fjernes, det lille profilstykke fjernes og kassetteværket kan udtages (HUSK at aftage de to stikforbindelser).

Remove screws B and the bottom plate under the radio unit may be dismantled.
Remove screws C and D, remove the small profile and the tapedeck may be dismantled. (Do not forget to remove the two plug connections).

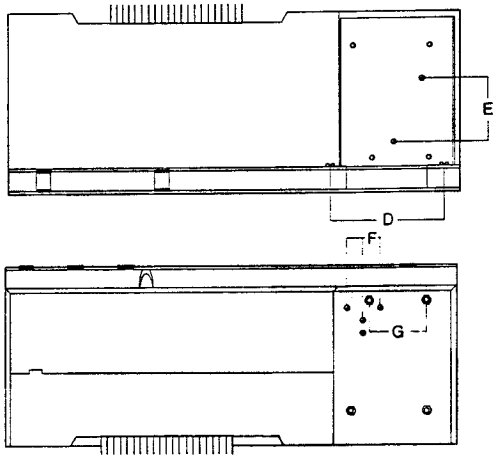

Skruerne E, F og bøsningerne G fjernes. PC7 og 8 kan nu forsigtig trækkes bagud og tages ud af chassiet (HUSK at aftage de to stikforbindelser).
Ved samling af apparatet justeres de to bøsninger G indtil højden af kasseetteværet passer med topplade og frontprofil.

Remove screws E and F and the bushings G. PC7 and 8 may now be pulled carefully backwards and removed from the chassis.
(Do not forget to remove the two plug connections).
When assembling the set, adjust the two bushings G till the tapedeck height levels with topplate and front profile.

SERVICE TIPS
Dismantling of front profile

Dismantle top plate, bottom plate radio, tapedeck, and cabinet sides.

Push volume knob and tuning knob all the way to the left. Carefully take the dial cord out of the arms on the volume and the tunning knobs.
Unsolder the leads on the preset unit.

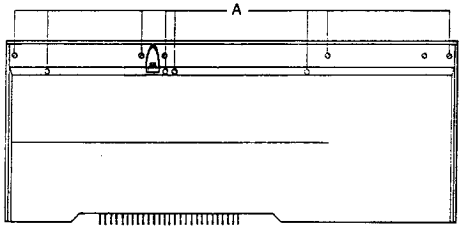

Remove screws A and B.

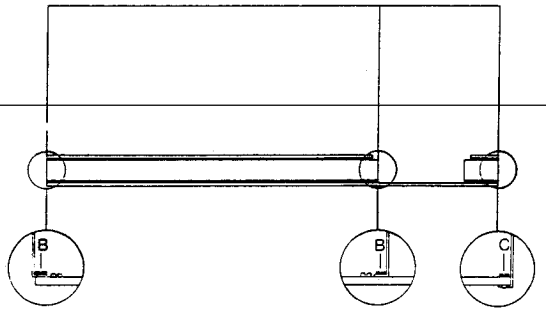

Loossen screw C and carefully take the chassis sidepiece out of the notch in the front profile.
(The chassis bottom for the cassette unit may be loosened).
Remove plug from the VU indicator.
Carefully pull the front profile out (mind the cord drives) and remove the indicator holder.
When mounting the front profile make sure thet the shafts of the slide potentiometers mesh with the slide knobs of the front profile.
Secure the dial cords with glue when they have been mounted.

For Service Manuals Contact
MAURITRON TECHNICAL SERVICES
8 Cherry Tree Rd, Chinnor
Oxon OX9 4QY
Tel:- 01844-351694 Fax:- 01844-352554
Email:- enquiries@mauritron.co.uk

ABO-CENTER V/HENRIKSENS ELEKTRONIK

Dial drive

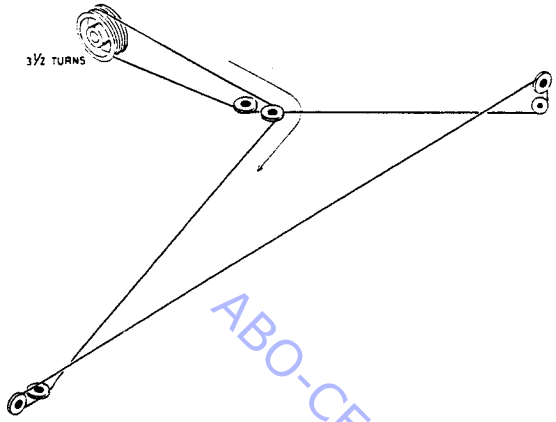

Dial cord is cut a length of 125 cm and mounted as shown in the sketch.
(Dial cord. code no. 3955016).

Tape deck

A few Beocenter 2600 may be provided with tapedecks which are not identical to the mechanical parts lists.
The change includes the following points:

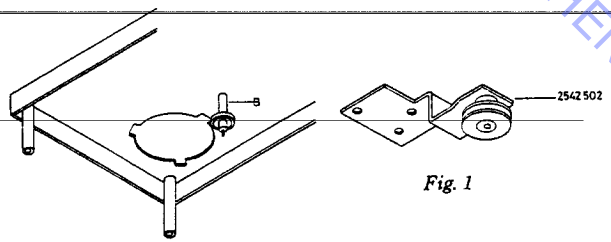

Fig. 1

1. Idler wheel pos. 295.
   When replacing idler wheel pos. 295 in tapedecks as shown in fig. 1, the shaft B is broken off, and idler wheel and bracket No. 2542502 are mounted.
2. Counter pos. 248.
   When replacing the counter in tapedecks where the counter is run from the underside of the chassis, pulley C and bushing D are dismantled. Pulley and bushing are turned and remounted (see fig. 2).
   Counter belt for this type of counter has code No. 2732043.

Fig. 2

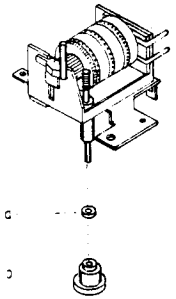

Frekvens

Frekvens	Fejlkilde
0,3, 0,6 Hz	Venstre og højre spole
1,2 Hz	Trykrulle
1,8 Hz. 3,6 Hz	Opsamlekobling
3,9 Hz	Koblingsrem (331)
4,3 Hz	Drivrem
6 Hz	Svinghjul
10 Hz	Opsamlekobling
15 Hz	Mellemhjul for kobling (295)
25 Hz	Motor

Wow frequencies

Wow frequencies	Source of Failure
0,3 Hz. 0,6 Hz	Left and right reel
1,2 Hz	Thrust roller
1,8 Hz. 3,6 Hz	Take-up clutch
3,9 Hz	Clutch belt
4,3 Hz	Drive belt
6 Hz	Flywheel
10 Hz	Take-up clutch
15 Hz	Idler wheel for clutch
25 Hz	Motor

For Service Manuals Contact
MAURITRON TECHNICAL SERVICES
8 Cherry Tree Rd. Chinnor
Oxon OX9 4QY
Tel:- 01844-351694 Fax:- 01844-352554
Email:- enquiries@mauritron.co.uk

ABO-CENTER V/HENRIKSENS ELEKTRONIK